Construction Equipment

DX225LC-7M

DOOSAN

Photos may include optional equipment

Powered by **Innovation**

Powered by **Innovation**

Certain specification(s) are based on engineering calculations and are not actual measurements. Specification(s) are provided for comparison purposes only and are subject to change without notice.
Specification(s) for your individual Doosan equipment will vary based on normal variations in design, manufacturing, operating conditions, and other factors. Pictures of Doosan units may show other than standard equipment

DOOSAN

Hyundai Doosan Infracore

489 Injung-ro, Dong-gu, Incheon, South Korea
http://global.doosanequipment.com

DIPBE-00-2204

Hyundai Doosan Infracore is an affiliate of Hyundai Heavy Industries Group.
The Doosan trademark, DOOSAN, is used under license from Doosan Corporation.

A DEEP DIG TO RAISE YOUR GAME

DX225LC-7M

A Winning Player in Every Match

Elec. Engine

Stands With Unparalleled Workload, Full Engine Power and Smart Sustainability

DX225LC-7M is waiting on a starting line, fully geared up with features to let you win. Whether explosive power is needed in your game or whether an agile and fast player is what you are looking for. Even when you are starting a long-distance race, DX225LC-7M is ready to cross the finish line in first place, in every single game.

Proven performance with the extra edge of intelligence. Unparalleled Workload, enhanced speed, first class digging power with even upgraded engine power. Newly added SPC system, autonomously efficiently save fuel without compromising productivity.

Whatever goal you need to reach, get there dependably with your winning team, intelligent and efficient features in full speed and with full power. Cabin designed for total controllability in true safety from the outset. Doosan's competent coaching staffs will offer a tailored solution to help you win more in less time.

DX225LC-7M. Medalist in all the matches, a winning player on every game. All time winner once again be fully readied to raise your game.

UNPARALLELED PERFORMANCE

DX225LC-7M guarantees the best productivity at all job sites. All of the key components directly contributing to producing power and speed improved. The new engine boasts explosive 129.6KW power which is far more improved than previous model. Superior workload along with increased fuel efficiency. Reducing the size and Narrowing the cylinder's diameter results in speed enhancement for faster working cycle. Maximized digging force backed up with versatility for DX225LC-7M to be used on all rough terrains.

HOLISTIC VIEW FOR EFFICIENCY

DX225LC-7M brings smart and innovative solutions which serve to both increase efficiency and long-term sustainability. SPC (Smart Power Control) system automatically controls engine RPM to supply proper torque depending on workload and speed to serve best fuel efficiency. Electronical engine which delivers superior power at the same time contributes to reduction of both emissions and fuel consumption. Doosan offers holistic and comprehensive solutions for your economic and environmental sustainability, enabling investments for the future.

ENHANCING COMFORT WITH UTTER SAFETY

Completely redesigned cabin comfort leads you in a maximum comfort and total control of equipment. To offer more segmented comfort options with ventilation and air conditioning range expanded to meet more various needs. Also safety features newly added including AVM (Around View Monitor) which prevents safety accidents caused by blind spot and seat-belt warning alarm for operator safety.

WE ARE BACK WITH NEW FEATURES

All The Nice Features of Previous Model Bodily Succeeded, Even Nicer Things to Come.

ELECTRIC PUMP CONTROL SYSTEM

- Electronically control the pump by generating virtual hydraulic flow.
- Effectively reduce fuel consumption.

DOOSANCONNECT TELEMATICS SERVICE (OPTIONAL)

- Offering preventive maintenance service based on web data.
- Provides an expert level consultation to dealers.
- Functions as fleet management tool for the customers.

ERGONOMICALLY DESIGNED WORK PEDAL

- Ergonomically designed Work pedals placed at both ends.
- Reducing fatigue and to lessen the load of operator.

OPG (OPERATOR PROTECTIVE GUARD) (OPTIONAL)

- Design changed for better visibility.

NEW LOOK & ENHANCED STRUCTURE

- Applied new decal and changed counterweight design. featured with stable and segmented bonnet mounting, reinforced counterweight and track frame.

FORTIFIED STRUCTURE

- Reinforced counterweight and track frame.
- Stable, segmented Bonnet mounting.
- Enhanced corrosive and wear resistance-bucket pin link -Y seal.

VERSATILITY & VARIOUS ATTACHMENT

- Two pump option for high flow attachment.
- New bucket line up : R2H+, R2S+.

SPC (SMART POWER CONTROL) SYSTEM (DX225LC-7M)

- Predictive powertrain control which automatically identifies working mode and adjusts engine RPM to supply proper pump torque Improving fuel consumption up to 5%.

MORE COMFORT

- Fully adjustable suspension seat and air conditioning function.
- DAB (Digital Radio Broadcasting), Microphone.
- Head lamp placed near to the cabin door. It helps operators to secure visibility with less shadow.

NEW 8-INCH TOUCH MONITOR

- Bigger LCD monitor with user-friendly touch screen panel.
- Allowing easy access to machine settings and maintenance data.

IMPROVED AIR FLOW SYSTEM FOR DEFROSTING AND AIR CONDITIONING

- The air conditioning system has also improved aerodynamically, for a pleasant working environment.

IMPROVED COVER DESIGN

- Honey comb design on the side door to minimize the in flow of dust.

SIDE AND REAR VIEW CAMERA (OPTIONAL)

- We made it possible for the operator to proceed in optimal conditions by installing devices such as rear cameras, which make it easy to recognize the invisible space.

AVM (AROUND VIEW MONITOR) (OPTIONAL) (DX225LC-7M)

- Around view monitor enables panoramic view which increases operational efficiency.
- Prevents the safety accidents caused by blind spots.

ETP (ELECTRIC TRANSFER PUMP) (OPTIONAL) (DX225LC-7M)

Use this switch to easily refill fuel for your machine after its inspection or repair.

*Option spec info is included to the images contained in this material and may not be the same with the actual specs.

THE POWER YOU WAITED FOR

The Philosophy of Absolute Performance, It's Your Turn to Experience

Powerful performance is engraved on its gene. DX225LCA-7M and DX225LC-7M provides superior performance among 22-ton class excavators. It can break- its way -through even in the heaviest loads and the most rugged works. Its enhanced engine power and hydraulic system enable to create an unbeatable power and torque characteristic. Its finest engineering offers surprisingly agile and precise operation but still true to it's root, power. Digging power and lifting capacities can all be optimized through Doosan's unrivalled tuning system. Designed to give you the best possible performance all the time.

DOOSAN "DL06" ENGINE (DX225LC-7M)

The DX225LC-7M is equipped with the latest generation Doosan engine DL06. Reliable Doosan in-house engine will assure you a superior performance with low fuel consumption. The 6-cylinder engine delivers power up to 168HP (125kW, Net). High power and wide torque range at low RPM, which can also reduce the strain on the clutch and transmission. Delivering performance which can be adapted to your various needs, for maximum productivity and profitability.

ELECTRONICALLY CONTROLLED PUMP

Electronically control the pump by generating virtual hydraulic flow, which effectively works on effectively reduce fuel consumption and high productivity.

SWING DRIVE

Increased torque is available to ensure rapid cycle, minimizing the shocks during the rotation.

TRAVEL DEVICE

In-house travel device provides simple internal structure and increases efficiency of the performance. Thicker sprocket minimizes incoming debris and provides higher durability.

EXCAVATOR CONTROL

Improved excavator control by new EPOS™. Acting as a brain of hydraulic excavator, EPOS™ have been optimized in association with CAN (Controller Area Network) communication link.

ETP (ELECTRIC TRANSFER PUMP) (OPTIONAL)

Use this switch to easily refill fuel for your machine after its inspection or repair.

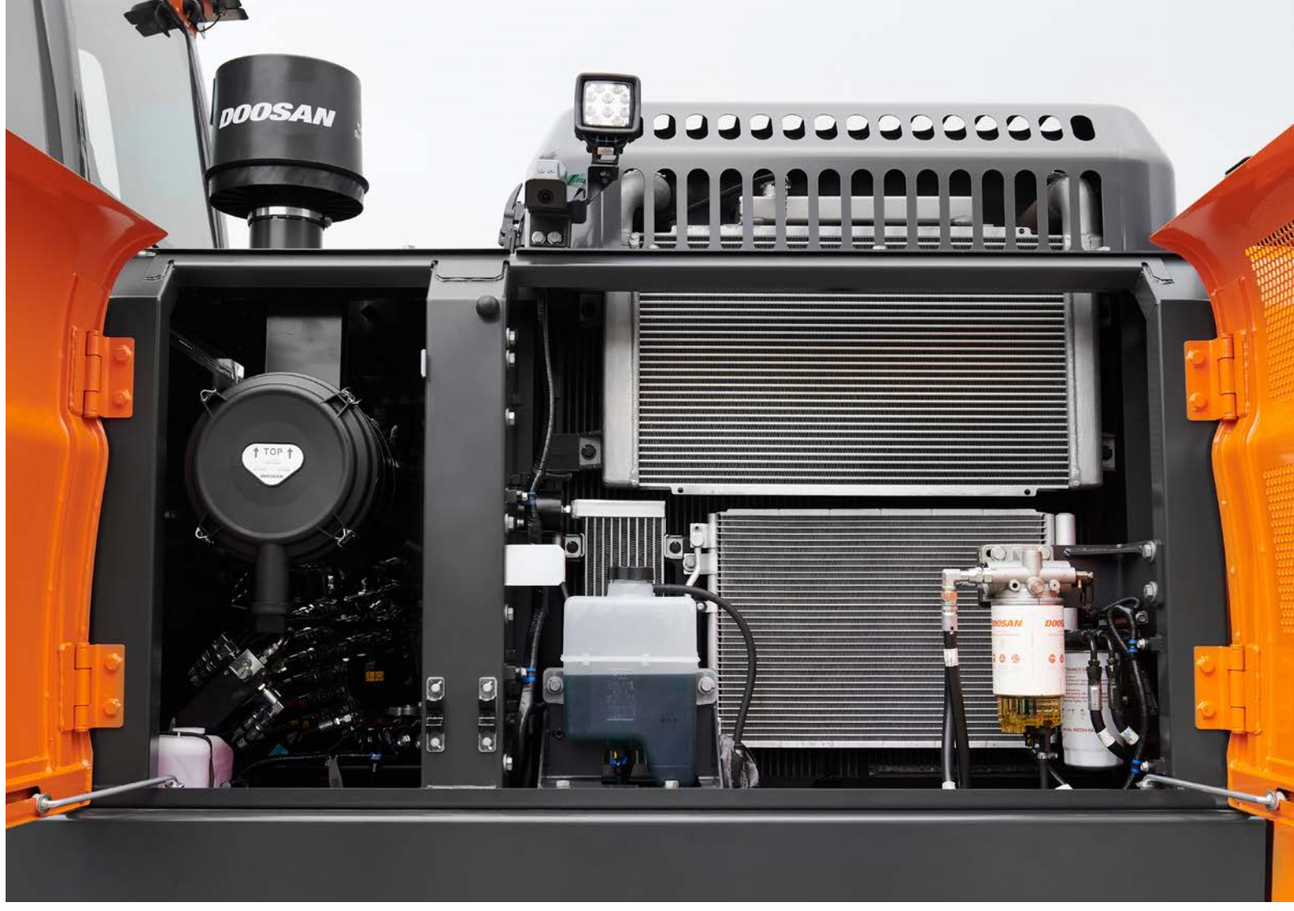

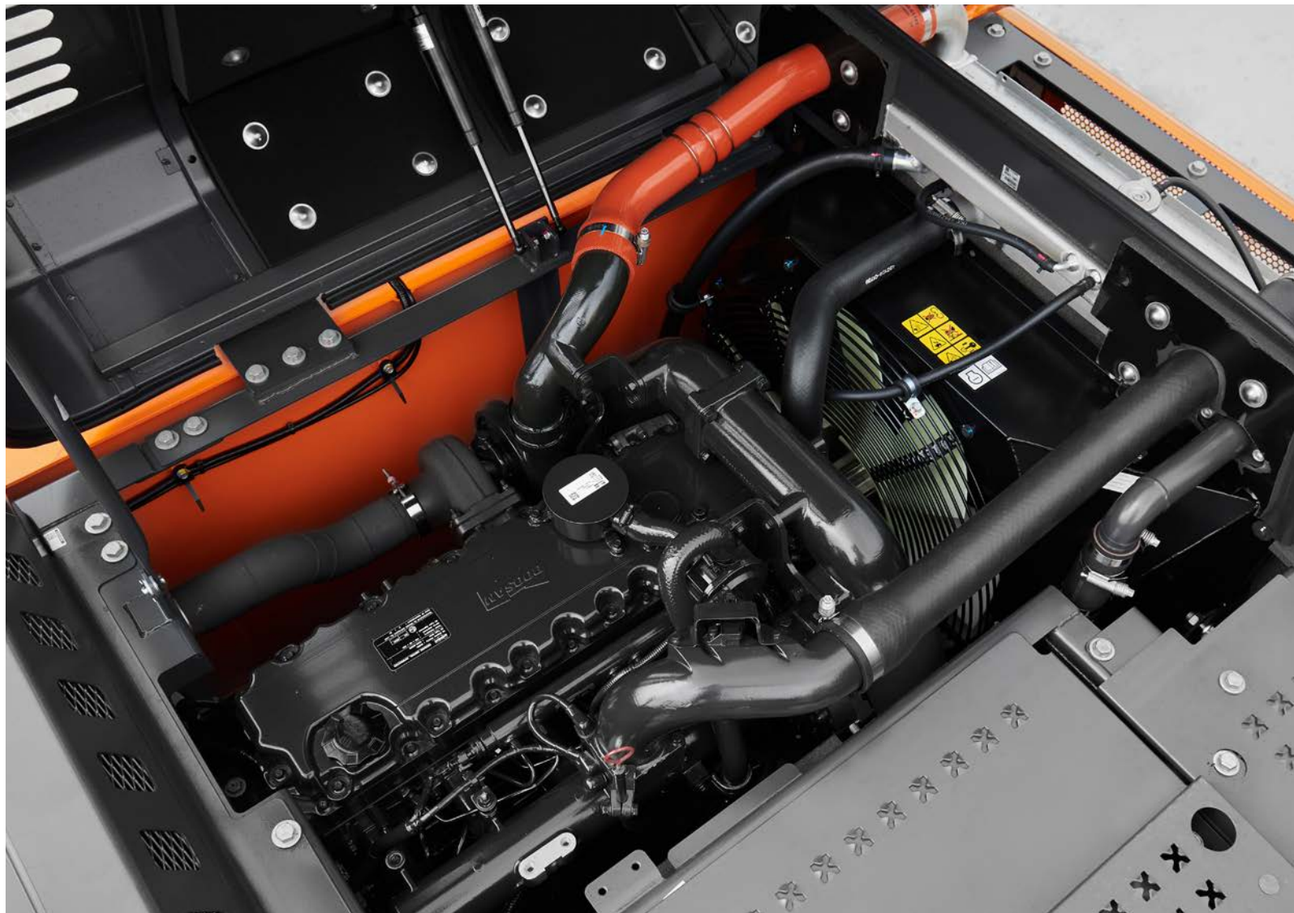

DO MORE

A Master Key for Every Challenge

DX225LC-7M is versatile enough to be a key point of your business. Whichever section of the construction industry, DX225LCA-7M can be optimized to do the particular job.

Maximize productivity and profitability by combining the DX225LC-7M with a range of durable attachments. To find the optimum productivity suitable for each customer, Doosan Provides various enable options. Two pump for high flow attachment and Lifting high, Breaker option. New bucket equipped to meet operator needs of different environment. Increase your versatility and perform a variety of tasks - all while experiencing faster cycle times and excellent control.

DIVERSIFICATION OF ADDITIONAL COUNTERWEIGHT OPTION

Additional counterweight can be assembled with standard counterweight. Increases tipping load of the machine to raise. You can choose between 3.8 ton, 4.1 ton, 5.3 ton options. 3.8 ton option newly added for further choices.

NEWLY ADDED BUCKET LINE

For ideal matching to the various job, a broad selection of buckets is provided. Newly launched R2H+ line up enables more breakout force, leading up to give faster and more efficient bucket fill.

TWO PUMP

Two pump provided for attachments which require high flow

BREAKER ASSIST SWITCH

Breaker assist switch is equipped for maximum attachment performance. Works for maintaining consistent downward pressure for high productivity. Easily controlled and can vary the speed.

BEST IN CLASS EFFICIENCY

Experience All-Time Best, with 14%, 20% Improved Fuel Efficiency.

Merely presenting the figures of fuel consumption doesn't give you the full picture of the productivity. Everything from the DX225LC-7M, the powertrain is engineered to save fuel without sacrificing performance or productivity. The new DX225LC-7M has also improved up to 20% fuel efficiency thanks to SPC system. From every angle, it can deliver even greater productivity to your business.

SPC (SMART POWER CONTROL) SYSTEM (DX225LC-7M)

SPC is a predictive powertrain control system, which automatically identifies working mode and adjusts engine RPM to supply proper pump torque. SPC relieves the driver's workload and contributes to a fuel-efficient working style. Raising the pump torque up to maximize when productivity and power is needed. Lowering the pump torque down to reduce unnecessary fuel consumption when fuel efficiency is needed.

PUMP MATCHING TECHNOLOGY

'Doosan's engine and pump matching technology' fully uses every drop of fuel to resolve the fuel efficiency problem. By matching the response time between pump and engine, the system not only reduces unnecessary fuel consumption but also controls exhaust fumes. Effectively contributing to eco friendly lifestyle by reducing your carbon footprint.

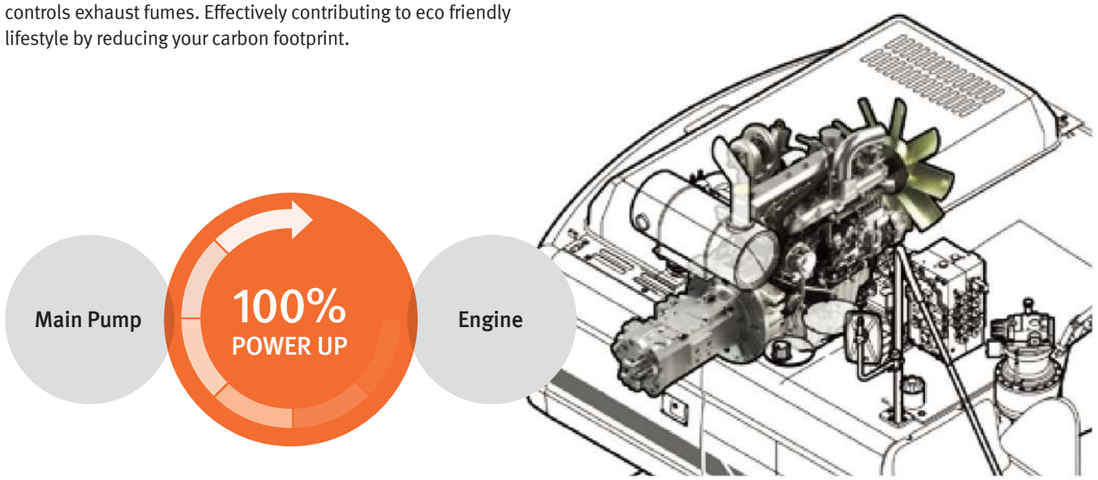

POWER MODE

(P+ mode / P mode / S mode / E mode) Four different power modes give you precise control over the excavator's powertrain. The system automatically identifies working mode and adjusts engine RPM to supply proper pump torque. Potential fuel consumption significantly reduced compared to permanently maintaining the same mode. Controlling this technology is intuitive and straightforward. Simple switch allows you to flick easily between modes.

ULTIMATE DURABILITY & RELIABILITY

Rough Work Calls For a Robust Vehicle

DX225LC-7M superior quality is not due to just one change. Rather, it is the result of hundreds of improvements in every element we've made throughout.

A reliable and durable structure is the foundation of maximized uptime. Durability reinforced by applying highly durable materials to structures of overall frames. Every component is engineered for uptime and extensively tested to validate its performance. The most updated and proved DI global platform was applied, which has been proved in diverse advanced market. All combined to increase the life of vital components and reduce operating costs.

The Durability you need to get the job done.

Heavy Duty Boom and Arm

A. CENTER BOSS PLATE
Size increased 40%

B. BOOM END BRACKET
Single piece of casting type

C. ARM BOTTOM PLATE
Increase plate thickness 20%

D. ARM SIDE PLATE
Increase plate thickness 15%

E. HEAVY DUTY BUCKET
Enhanced design new bucket

F. BOOM PLATE
Increase boom foot height and decrease width Increase plate thickness 15%

IMPROVED ENGINE DURABILITY BY TECHNOLOGICAL IMPLEMENT

Additional water separator in fuel to prevent engine damage. Large capacity of forced air cleaner also removes over 99% of airborne particles, reducing the risk of engine contamination and lengthen the cartridge change intervals. All improvements of engine components offer a high degree of reliability and an extended service life.

STABLE, SEGMENTED BONNET

Mounting Advanced standard counterweight structure to stably control the enlarged bucket. Additional counterweight options supplied for customers who need more tipping load.

X-CHASSIS UNDERCARRIAGE

X-chassis undercarriage enables increased ground clearance and improved maneuvering ability. Sloped surface design optimized to shed debris and maximize uptime.

TRACK COMPONENT IMPROVEMENT

The chain composed of self - lubricating sealed links, impervious to external contamination. Track frame firmly locked by mechanically bolted pins

LIFTING HOLE

For better and easier work, we've added lifting hole in the front.

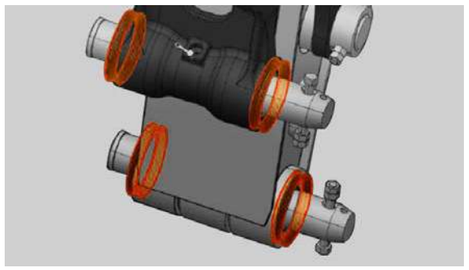

ARM END LINK WITH Y-SEAL

Applied Y-seal to prevent pollutant from bucket connection.

STRUCTURE REINFORCEMENT

Strength and stiffness reinforcement through improved welding process and also applying 25 ton class tail frame.

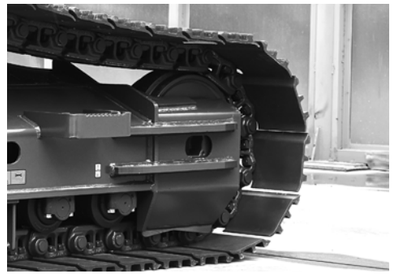

IDLER BRACKET IMPROVEMENT (DX220AF-7M)

Idler Bracket has been fitted with reinforced bar. Thick and wider strip idler applied to add strength and avoid bending distortion. Protect the main components from external impacts.

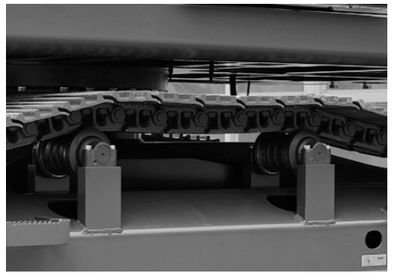

UPPER ROLLER ENHANCEMENT (DX220AF-7M)

Reinforced design to meet the tough forestry market durability requirements.

EXCLUSIVELY, FOR OPERATOR

Ergonomically Designed Features and Enhanced Controllability Maximize Operator's Satisfaction

DX225LC-7M strongest performance don't even come from the engine. At first glance and upon closer inspection, DX225LC-7M shows what is important in the construction industry. Every part of spacious cabin interior is the result of Doosan's endeavor to see things in the operator's point of view.

Exclusive interior with its new gauge panel and high ergonomic design. Enhancing better visibility, air conditioning system for intuitive controllability and comfort. Also assuring operator's safety by establishing protective and adaptive working environment. Thinking about all the possible outbreaks you can have, we went ahead and fitted some of the advanced safety systems into equipment.

To be an office on wheels and your smart work partner at same time. The best seat is reserved for the operator.

OPG (OPERATOR PROTECTIVE GUARD) (OPTIONAL)

Operator Protective Guard assures operator safety and accessibility to major components. Allows simple and safe access to maintenance point.

DX225LC-7M

HEATING AND COOLING SEAT (OPTIONAL)

The optional, air-suspended, climatized driver's suspension seat provides pleasant seating conditions and a high level of comfort. Equipped with the integral armrests and temperature control device. Heating and cooling temperature range segmented in three stage to meet various customer needs.

SEAT-BELT ALARM

For enhanced safety and to protect operator in an emergent accident, DX225LC-7M is equipped with seat-belt alarm.

AVM (AROUND VIEW MONITOR) (OPTIONAL)

Around View Monitor optimizes the overall view to and makes it easier for the operator to connect up the attachments. The system comprises a front, a rear and an additional all-round camera which can be freely positioned for attached implements. The images can be viewed on a monitor in the interior of the cab. The operator can directly view the area around equipment, when changing implements. Also can have a perfect view of the front structure.

HVAC SYSTEM FILTER COVER (ROPS)

Air ventilation filter and the cover equipped to avoid contamination and system durability. Easy to access for quick and simple maintenance.

SIDE AND REAR VIEW CAMERA (OPTIONAL)

Optional side and rear-view camera keep watch in ways beyond operator's sight. Additional LED lighting system attached on each side for the clear identification.

EMERGENCY STOP SWITCH

For enhanced safety and to enable fast reactions in an emergency, DX225LC-7M equipped with an emergency stop switch that allows the interruption of certain body functions whilst allowing the vehicle to remain running.

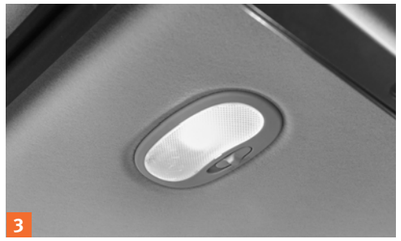

1. NEW 8-INCH MONITOR

Bigger LCD monitor with user-friendly touch screen panel, allowing easy access to machine settings and maintenance data.

2. ERGONOMICALLY DESIGNED WORK PEDAL

Ergonomically designed Work pedals placed at both ends. Pedal angle adjusted to relieve the pressure on ankle and joints, Reducing fatigue and to lessen the load of operator.

3. HEAD LAMP

Head lamp placed near the cabin door which secures operator's visibility by preventing the shadow. This new head lamp system contributes to enhanced safety through improved illumination of the way. Enhances driving comfort and driving safety.

4. AIR CONDITIONING AND DEFROSTING SYSTEM (OPTIONAL)

Aerodynamically designed Air conditioner equipped for inner climate control.

5. CONTROL LEVER (OPTIONAL)

Precise control of the equipment increases versatility, safety and facilitates tricky operations requiring great precision. Leveling operations and the movement of lifted load made easier and safer.

6. AIR SUSPENSION SEAT (OPTIONAL)

Equipped with various functions including the adjustment forth and back. Lumbar support effectively reduces the vibration of apparatus during work. Considering the cold environment, seat heating function also equipped in seat.

7. ALL ROUND VISIBILITY

Enlarged front shield assures best possible all-around visibility. Panoramic cabin windows and suitable seat position assists on safety and controllability promotion via enhanced lower part of visibility on side position. In crowded city streets or in hazardous construction workplace, operator can get better control and command of surroundings.

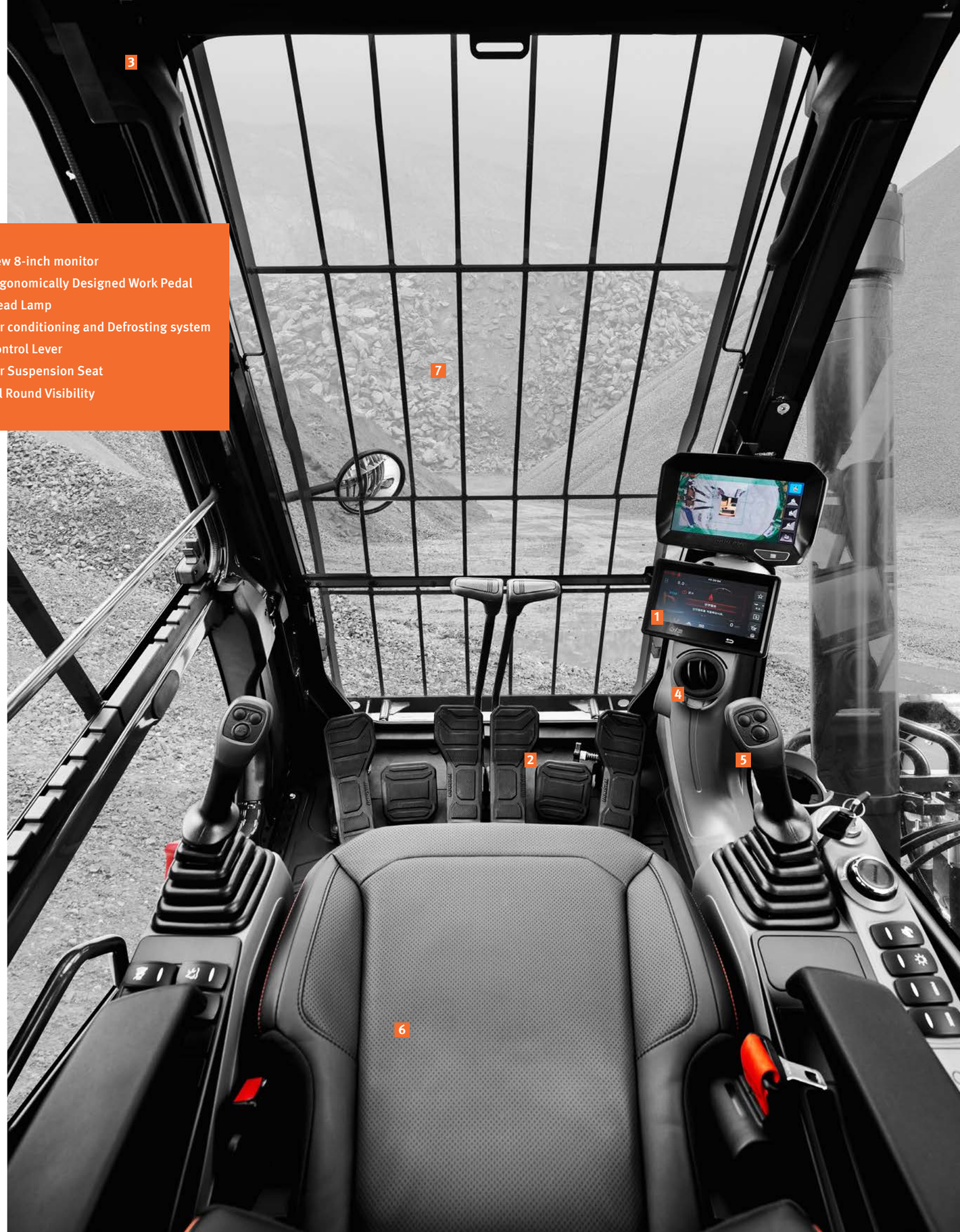

1. New 8-inch monitor
2. Ergonomically Designed Work Pedal
3. Head Lamp
4. Air conditioning and Defrosting system
5. Control Lever
6. Air Suspension Seat
7. All Round Visibility

 * Option spec info is included to the images contained in this material and may not be the same with the actual specs.

MAINTENANCE

Easy Maintenance, Start at Once.
Smart Maintenance, All by Itself

Maintain this superior equipment as the way it was. Safe and easy maintenance feature facilitates apparatus to operate in best condition at long intervals. DX225LC-7M allows Easy access to engine component parts and Short maintenance procedure. Familiar and intuitive. DoosanCONNECT provides you the operational machine data in an hourly cycle. You can even control most functions outside the equipment.

1. SIMPLE MECHANICAL ENGINE
- In-house mechanical engine with approachable structure
- Engine Bonnet equipped with wide open Side panel

2. EASY ACCESS TO DAILY MAINTENANCE POINTS
Wide open panels allowing easy access to service points
- Allowing quick replacement filters and daily maintenance check easier

Easily accessible filter located at ground level
- Located at Ground level with Wide open side doors

Centralized Grease inlets for easy maintenance
- The boom & arm grease inlets are grouped for easy access

3. LARGE GUARD RAILS (OPTIONAL)
- Assuring operator's safety during the work hour
- Easy access / Anti skid

4. DOOSANCONNECT (TMS SYSTEM)
- Maintenance data be directly available from control panel
- Allows daily maintenance check easier

ENGINE OIL FILTER
Engine oil filter offers a high level of filtration, lengthen the oil change interval to 500 hours. Positioned in place which is resistant to contamination and impervious in environment condition, but easy to access for filter change.

EASY MAINTENANCE ON RADIATORS
Approach to various radiator is easy, making cleaning easier. Engine part accessibility is also enhanced, can be checked through via top and side panels.

HYDRAULIC OIL RETURN FILTER
Glass fiber filter technology filtering out up to 99.5 % of impurities, increasing oil change interval.

AIR CLEANER
Air cleaner of large capacity removes 99 % of airborne particles, reducing the risk of engine contamination.

WATER SEPARATOR
Highly efficient water separator in fuel to prevent engine damage by removing moisture. Reducing the risk of external engine contamination and lengthen the engine's lifespan.

PRE-CLEANER
Rotor type dry pre-cleaner attached as a standard option.

DoosanCONNECT® Telematics Service (OPTIONAL)

TELECOMMUNICATIONS Data flow from machine to web

TELEMATICS SERVICE TERMINAL

Telematics Service terminal is installed to machine / connected to EPOS™

TELECOMMUNICATION

GPS, EPOS™ data is sent to sedignated server by GSM, Satellite telecommunication

DOOSAN TELEMATICS SERVICE WEB

Doosan, Dealer, Customer can easily monitor the GPS, EPOS™ data from Core Telematics Service web

TELEMATICS SERVICE BENEFITS Doosan and dealer support customers to improve work efficiency with timely and responsive services

CUSTOMER

Improve work efficiency
- Timely and preventive service
- Improve operator's skills by comparing work pattern
- Manage fleet more effectively

DEALER

Better service for customers
- Provide better quality of service
- Maintain machine value
- Better understanding of market needs

DOOSAN

Responsive to customer's voice
- Utilize quality-related field data
- Apply customer's usage profile to deveping new machine

FUNCTIONS(WEB/APP) Doosan Telematics Service provides various functions to support your great performance

• GPS

• Fuel information

• Preventive maintanance

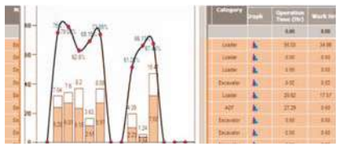

• Operation hours

• Fault code/warning

• ADT Productivity

• Reports

FUNCTION		EXCAVATOR	WHEEL LOADER	ADT
GPS	· Location · Geo-fence	All models	All models	All models
Operation hours	· Daily, Weekly, Monthly report	All models	All models	All models
Operation hours	· Total operation hours · Operation hours by mode	All models	All models	All models
Maintenance parts	· Preventive maintenance by item replacement cycle	All models	All models	All models
Fault code/ Warning	· Fault code · Machine Warnings on Gauge Panel	All models	All models	All models
Fuel information	· Fuel level · Fuel consumption	All models	All models	All models
Dump capacity	· Dump tonnage · Count of Work Cycle	N/A	N/A	All models

Some features may be districted, depending the models and regions. For more information, please contract your regional dealer

GLOBAL PARTS NETWORK

QUALITY-PROVEN MAIN COMPONENTS

Doosan provides fast and precise worldwide delivery of genuine Doosan parts through its global PDC (parts distribution center) network.

GLOBAL NETWORK

The global network of the GPDC (Global Parts Distribution Center) maximizes its supply rate by making sure that each center is stockpiled with all the critical parts required for businesses in its area. The network also minimizes the time and costs required for parts delivery by positioning PDCs close to major markets around the world. Doosan PDCs communicate with customers in their time zone, informing them that they are open for operation, and deliver parts to them as early as possible.

THE GLOBAL PARTS DISTRIBUTION CENTER NETWORK

PDCs had been set up as shown below, including Mother PDC in Ansan, Korea. The eight other PDCs include one in China (Yantai), three in USA (Seattle, Atlanta and Miami), two in Europe (Germany and the UK), one in the Middle East (Dubai) and one in Asia (Singapore).

MPDC : Mother Parts Distribution Center

PDC : Parts Distribution Center

PDC BENEFIT

Distribution Cost Reduction

Maximum Parts supply rate

Shortest distance/ time parts delivery

Real-time service support

Minimum downtime

TECHNICAL SPECIFICATION (DX225LC-7M)

ENGINE

Model

Doosan DL06
2 valves per cylinder, vertical injectors, water cooled, turbo charged with air to air intercooler. The emission levels are well below the values required for phase III.

Number of cylinders

6

Nominal flywheel power

GROSS POWER 129.4 kW (176PS, 174HP) @ 1,900 rpm (SAE J1995)
NET POWER 125.0 kW (170PS, 168HP) @ 2,000 rpm (SAE J1349)

Max torque

80 kgf.m @ 1,400 rpm

Piston displacement

5,890 cc (359 cu.in)

Bore & stroke

100 mm x 125 mm (3.9" x 4.9")

Starter

24 V / 6 kW

Batteries

2 X 12 V / 100 Ah

Air cleaner

Double element with auto dust evacuation.

HYDRAULIC CYLINDERS

The piston rods and cylinder bodies are made of high-strength steel. A shock absorbing mechanism is fitted in all cylinders to ensure shockfree operation and extend piston life.

Cylinders	Quantity	Bore x Rod diameter x stroke
Boom	2	120 x 85 x 1,263 mm
Arm	1	135 x 95 x 1,443 mm
Bucket	1	120 x 80 x 1,060 mm

ENVIRONMENT

Noise levels comply with environmental regulations (dynamic values).

Sound level guarantee

103 DB (A) (2000/14/EC)

Cab sound level

74 DB (A) (ISO 6396)

HYDRAULIC SYSTEM

The heart of the system is the EPOS™ (Electronic Power Optimizing System). It allows the efficiency of the system to be optimized for all working conditions and minimizes fuel consumption.

- The hydraulic system enables independent or combined operations.
- Two travel speeds offer either increased torque or high speed tracking.
- Cross-sensing pump system for fuel savings.
- Auto deceleration system.
- Two operating modes, two power modes.
- Button control of flow in auxiliary equipment circuits.
- Computer-aided pump power control.

Main pumps

2 variable displacement axial piston pumps
Max flow : 2 x 222.3 l/min

Pilot pump

Gear pump - max flow: 27 l/min

Maximum system pressure

Front
Normal mode : 350 kgf/cm^2
Power mode : 350 kgf/cm^2
Travel : 370 kgf/cm^2
Swing : 270 kgf/cm^2

SWING MECHANISM

- An axial piston motor with two-stage planetary reduction gear is used for the swing.
- Increased swing torque reduces swing time.
- Internal induction-hardened gear.
- Internal gear and pinion immersed in lubricant bath.
- The swing brake for parking is activated by spring and released hydraulically.

Swing speed : 0 to 9.1 rpm

UNDERCARRIAGE

Chassis are of very robust construction, all welded structures are designed to limit stresses. High-quality material used for durability. Lateral chassis welded and rigidly attached to the undercarriage. Track rollers lubricated for life, idlers and sprockets fitted with floating seals.

Number of rollers and track shoes per side

Upper rollers : 2 (standard shoes)
Lower rollers: 8
Shoes : 49
Total length of track : 4,445 mm (14' 7")

WEIGHT

Boom 5,700 mm (18'8") Arm 2,900 mm (9'6") Bucket SAE H Class 0.92 m^3 (1.20 yd^3)

	Shoe width	Operating weight	Ground pressure
Triple Grouser	(Std) 600 mm (2')	21,700 kg (47,840 lb)	0.46 kgf/cm^2
	700 mm (2' 4")	22,000 kg (48,502 lb)	0.4 kgf/cm^2
	800 mm (2' 8")	22,300 kg (49,163 lb)	0.36 kgf/cm^2

DRIVE

Each track is driven by an independent axial piston motor through a planetary reduction gearbox.
Two levers with control pedals guarantee smooth travel with counter rotation on demand.

Travel speed (fast/slow)

5.5 / 3.0 km/h (3.47 / 1.86 mph)

Maximum traction force

10,300 / 22,500 kgf (22,708 / 49,604 lbf)

Maximum grade

35 (70%)

BUCKET DIGGING FORCES

Bucket Type	Capacity (m^3) SAE	DIGGING FORCE (NOM/PRESS UP, TON)
GP	0.92 / 0.51 / 0.81 / 1.05	[SAE] 13.3 / 14.1 [ISO] 15.6 / 16.4
DITCH	0.54	
(SLR) GP	0.39	[SAE] 8.6 / 9.1 [ISO] 10.0 / 10.6
R1H	0.92 / 1.05 / 1.17	[SAE] 12.9 / 13.7 [ISO] 14.5 / 15.3
R1S	1.05	
R2H	0.92 / 1.08 / 1.24	[SAE] 13.6 / 14.3 [ISO] 14.9 / 15.7
R2H+	1.08	
R2S	0.91 / 1.07	

REFILL CAPACITIES

Fuel tank

400 L (105.7 US gal)

Cooling system (Radiator capacity)

28.8 L (7.6 US gal)

Engine oil

28 L (7.4 US gal)

Swing drive

5 L (1.32 US gal)

Final drive
(each =Travel Device = travel motor + travel reduction gear)

2 X 4 L (2 X 1.06 US gal)

Hydraulic tank

196 L (51.8 US gal)

ARM DIGGING FORCES

	LENGTH (mm)	WEIGHT (kg)	DIGGING FORCE (NOM/PRESS UP, TON)
STD. ARM	2,900	648	[SAE] 9.7 / 10.3, [ISO] 10.1 / 10.7
LONG ARM	3,500	797	[SAE] 8.7 / 9.2, [ISO] 9.0 / 9.6
SLR ARM	6,200	1,055	[SAE] 5.7 / 6.2, [ISO] 5.8 / 6.2
FORESTRY ARM	2,900	715	[SAE] 9.7 / 10.3, [ISO] 10.1 / 10.7
HD ARM	2,900	761	[SAE] 9.7 / 10.3, [ISO] 10.1 / 10.7
HD ARM	2,400	688	[SAE] 11.3 / 11.9, [ISO] 11.8 / 12.5

BUCKET

					C/W (ton)	4.1			5.3
					SHOE (mm)	600			600
Bucket Type	Capacity (m^3)		Width (mm)		Weight (kg)	5.7m Boom			SLR (8.5m)
	SAE/PCSA	CECE	With Cutter	W/O Cutter		2.4m HD Arm	2.9m HD Arm	3.5m Arm	SLR (6.2m)
GP	0.39	0.35	825	736	345	-	-	-	A
	0.35	0.47	768	722	549	A	A	A	-
	0.81	0.72	1,125	1,065	684	A	A	A	-
	0.92	0.81	1,233	1,173	724	A	A	A	-
	1.05	0.92	1,369	1,309	776	A	B	B	-
R1H	0.92	0.80	1,198	1,264	740	A	A	A	-
	1.05	0.90	1,331	1,397	787	A	B	B	-
	1.17	1.03	1,453	1,519	848	B	C	C	-
DC	0.54	0.46	1,800	-	358	-	-	-	C
R1S	1.05	0.92	1,331	1,397	990	A	B	C	-
R2H	0.92	0.83	1,050	1,096	867	A	A	B	-
	1.08	0.97	1,200	1,246	939	A	B	C	-
	1.24	1.11	1,350	1,369	1,011	B	C	D	-
R2H+	1.08	0.97	1,200	1,246	1,033	B	C	C	-
R2S	0.91	0.82	1,050	1,094	1,078	A	B	C	-
	1.07	0.96	1,200	1,244	1,182	B	C	D	-
Maximum load pin-on(payload+bucket)						3,242	2,953	2,683	1,311

Based on ISO 10567 and SAE J296, arm length without quick change clamp
A : Suitable for materials with density of 2,100 kg/m^3 (3,500 lb/yd^3) or less
B : Suitable for materials with density of 1,800 kg/m^3 (3,000 lb/yd^3) or less
C : Suitable for materials with density of 1,500 kg/m^3 (2,500 lb/yd^3) or less
D : Suitable for materials with density of 1,200 kg/m^3 (2,000 lb/yd^3) or less
X : Not recommended

DIMENSIONS (DX225LC-7M)

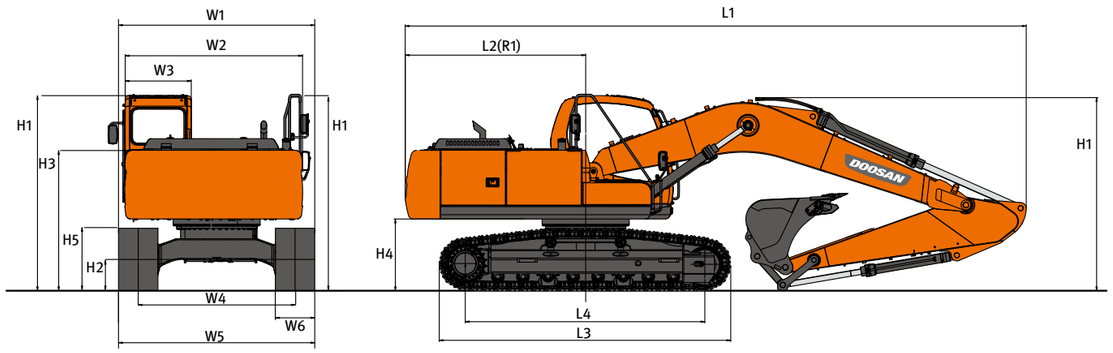

DIMENSIONS

Model				DX225LC-7M			
Dimension				STD	OPT1	OPT2	OPT3
Boom				mm	5,700	5,700	5,700	8,500
Arm				mm	2,900	2,400	3,500	6,200
Bucket				m^3	0.92	1.08	0.81	0.39
Undercarriage (Track+Grouser)				mm	LC+TG	LC+TG	LC+TG	LC+TG
Overall	L1	Overall Length		mm	9,570	9,600	9,610	12,390
	H1	Overall Height	Boom	mm	2,890	2,940	3,110	3,295
			Hose	mm	3,005	3,105	3,305	3,385
			Cabin	mm	2,980	2,980	2,980	2,980
			Hand/Guard Rail	mm	3,175	3,175	3,175	3,175
	W1	Overall Width		mm	2,990	2,990	2,990	2,990
	L2 (R1)	Rear Swing Radius		mm	2,909	2,909	2,909	2,909
	H2	Ground Clearance*		mm	*450.5	*450.5	*450.5	*450.5
Swing Body	W2	House Width		mm	2,710	2,710	2,710	2,710
	W3	Cabin Width		mm	1,010	1,010	1,010	1,010
	H3	Height Over Cover		mm	2,140	2,140	2,140	2,140
	H4	Counterweight Clearance*		mm	*1,066	*1,066	*1,066	*1,066
Undercarriage	H5	Track Height*		mm	*883	*883	*883	*883
	L3	Track Length		mm	4,445	4,445	4,445	4,445
	L4	Tumbler Distance		mm	3,650	3,650	3,650	3,650
	W4	Track Gauge		mm	2,390	2,390	2,390	2,390
	W5	Undercarriage Width	STD/LC	mm	2,990	2,990	3,190	3,190
	W6	Shoe Width		mm	600	600	800	800
	etc.	Grouser Height		mm	26	26	26	26

*Grouser not included

WORKING RANGES (DX225LC-7M)

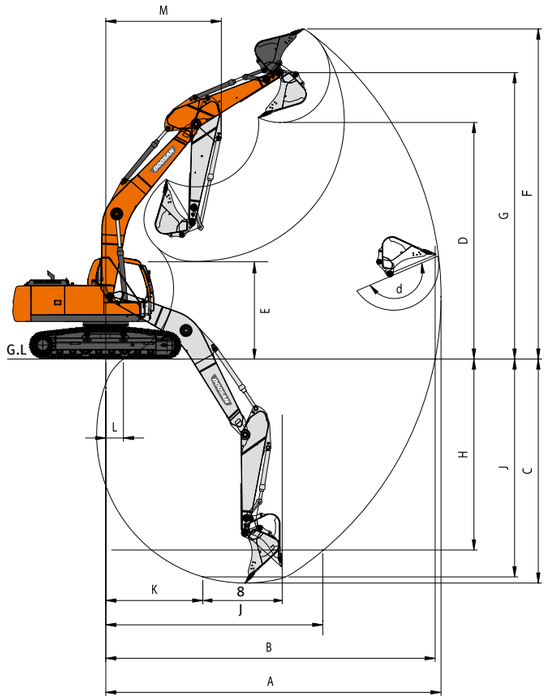

WORKING RANGE

BOOM LENGTH		mm	5,700			8,500
ARM TYPE		mm	(Std.) 2,900	2,400	3,500	6,200
	BUCKET TYPE (SAE / PCSA)	m^3	(Std.) 0.92	1.05	0.81	0.39
A	MAX. DIGGING REACH	mm	9,865	9,460	10,385	15,365
B	MAX. DIGGING REACH (GROUND)	mm	9,695	9,280	10,220	15,255
C	MAX. DIGGING DEPTH	mm	6,590	6,105	7,210	11,660
D	MAX. DUMPING HEIGHT	mm	6,830	6,675	6,960	10,830
E	MIN. DUMPING HEIGHT	mm	2,500	2,985	1,870	2,015
F	MAX. DIGGING HEIGHT	mm	9,620	9,425	9,635	13,045
G	MAX. BUCKET PIN HEIGHT	mm	8,270	8,130	8,415	12,050
H	MAX. VERTICAL WALL DEPTH	mm	5,525	5,385	5,995	9,715
I	MAX. RADIUS VERTICAL	mm	6,415	6,025	6,740	10,060
J	MAX. DIGGING DEPTH(8'LEVEL)	mm	6,395	5,890	7,030	11,555
K	MIN. RADIUS 8' LINE	mm	2,820	2,840	2,790	4,815
L	MIN. DIGGING REACH	mm	575	1,690	-225	150
M	MIN. SWING RADIUS	mm	3,560	3,575	3,615	4,970
D.	BUCKET ANGLE (DEG)	°	177	177	177	177

STANDARD & OPTION (DX225LC-7M)

STANDARD EQUIPMENT

Boom & Arm

- 5.7 m Boom (Heavy duty)
- 2.9 m Arm (Heavy duty)

Hydraulic system

- Boom and arm flow regeneration
- Boom and arm holding valves (MCV)
- Swing anti-rebound valves
- Spare ports (Control valve)
- One-touch power boost

Cabin & Interior

- All weather sound suppressed type cab
- Air conditioner & Heater
- Adjustable suspension seat with head rest and adjustable arm rest
- Pull-up type front window and removable lower front window
- Room light
- Intermittent windshield wiper
- Cup holder
- Hot & Cool box
- LCD color monitor panel
- E/G RPM control dial
- AM/FM radio + MP3 (USB)
- Remote radio ON / OFF switch
- 12 V, 24 V power socket
- Serial communication port for laptop PC interface
- Joystick lever with 3 switches

Safety

- Large handrails and step
- Convex metal anti-slip plates
- Seat belt
- Hydraulic safety lock lever
- Safety glass
- Hammer for emergency escape
- Right and left rearview mirrors
- Travel alarm

Others

- Double element air cleaner
- Additional water separator
- Dry type pre cleaner
- Fuel filter
- Dust screen for radiator/oil cooler
- Engine overheat prevention system
- Engine restart prevention system
- Self-diagnostic system
- 60 A Alternator (24 V, 50 amps)
- Electric horn
- Halogen working lights (frame mounted 1, boom mounted 2)
- Hydraulic track adjuster
- Track guards
- Greased and sealed track link
- Hydraulic oil tank air breather filter
- Long & Fixed track

OPTIONAL EQUIPMENT

Some of optional equipments may be standard in some markets. Some of this optional equipment is not available in some markets. You must check with the local DOOSAN dealer to know about the availability or to release the adaptation following the needs of the applications.

Boom & Arm

- 5.7 m Boom
- 8.5 m Boom
- 2.4 m Arm (Heavy duty)
- 2.9 m Arm
- 3.5 m Arm
- 6.2 m Arm

Safety

- Boom and arm hose rupture protection valve
- Overload warning device
- FOGS (ISO 10262, FOGS standard)
- Travel & swing alarm
- Rotating
- Rear lamp
- Cabin Front Upper / Lower Guard
- Side & Rear view camera
- LED lights
- Battery protector cover

Cabin & Interior

- Air suspension seat
- Rain Shield
- High seat Mount
- Breaker pedal
- ROPS / FOGS Cabin
- Steel roof cover
- Additional mirror
- DAB Audio

Others

- Piping option
  - Piping for Crusher
  - Piping for Breaker
  - Piping for Quick clamp
- 700mm / 800mm shoe
- Lower wiper
- 60 A / 80 A alternator
- Fuel filler pump
- Working Lights
  - 4-front / 2-rear on cabin
  - 2-front on cabin
  - 1 on counterweight
- Counterweight (3.8 Ton / 5.3 Ton)
- Hydraulic Oil
  - Cold weather (VG32)
  - Normal (VG46)
  - Tropical weather (VG68)
- Breaker filter
- Water separator with heater
- Short & Fixed track