Powered by **Innovation**

Certain specification(s) are based on engineering calculations and are not actual measurements. Specification(s) are provided for comparison purposes only and are subject to change without notice. Specification(s) for your individual Doosan equipment will vary based on normal variations in design, manufacturing, operating conditions, and other factors. Pictures of Doosan units may show other than standard equipment

DOOSAN

Hyundai Doosan Infracore

489 Injung-ro, Dong-gu, Incheon, South Korea
http://global.doosanequipment.com

DIPBE-00-2202

Hyundai Doosan Infracore is an affiliate of Hyundai Heavy Industries Group.
The Doosan trademark, **DOOSAN**, is used under license from Doosan Corporation.

Construction Equipment

DOOSAN

DX490LCA-7M
DX490LC-7M
DX530LCA-7M
DX530LC-7M

* Photos may include optional equipment

Powered by **Innovation**

THE CONQUEROR

DX490LCA-7M and DX530LCA-7M:

Unleashed Power, Rough to the Core
The Conquerors on the Top of the Chain

Born conquerors. DX490LCA-7M and DX530LCA-7M expand new territories of performance and dominate difficult territories. Shifted through long selection, the magnetic and powerful predator finally formed with stunning performance and durability. Representing the new generation of Doosan excavator, DX490LCA-7M and DX530LCA-7M would be an ultimate conqueror, reigning over the site.

Ferocious, imposing, yet exquisite. Refined savage is a term that perfectly represents the both-sided characteristics of DX490LCA-7M and DX530LCA-7M. Quietly confident, supreme power of ruler with tranquility of restrained refinement. Unmistakably bold, the distinctive shapes speak of their agility and power. Capability with do anything attitude and toughness in its core. At the same time, they are embodiments of the craftmanship supported by a suite of innovative benefits. Uncompromisingly, it all adds up to the greatest possible levels.

Planting new flags in the construction industry, the conquerors will deliver unmatched satisfaction in return. The end of progress, DX490LCA-7M and DX530LCA-7M, finally ascending the throne.

THE POWER OF CONQUEROR

DX490LCA-7M and DX530LCA-7M guarantee the best productivity at all job sites. Superior workload along with lifting capacities all combined for the overwhelming performance. Powered by a reliable Doosan engine, which delivers unparalleled power and large capacity of swing motor provide the biggest swing torque.

A CONSTANT TERM OF ABSOLUTE DURABILITY

DX490LCA-7M and DX530LCA-7M are featured by reinforced heavy-duty arm and boom with fortified undercarriage to withstand high-impact materials. Equipped with tracks that is up to 3.9 m wider and up to 5.5 m longer Designed using reliable element and formed in optimal structural integrity. Ensuring long life and high uptime even in extreme job sites.

ENHANCED COMFORT WITH UTTER SAFETY

Completely redesigned cabin comfort leads you in a maximum comfort and total control of equipment. To offer more segmented comfort options with ventilation and air conditioning range expanded to meet more various needs.

THE VICTORS

DX490LC-7M and DX530LC-7M:

The Brave New Victors for Any Serious Work Reliable Benchmarks for Next Durability and Technology

Brave new victors, armed with endurance. Fierce but measured. Solid and taut, authentic and balanced. First to go beyond and foremost to stand still through time. From the outset, DX490LC-7M and DX530LC-7M were designed to deliver pure power and outstanding performance. To the last, DX490LC-7M and DX530LC-7M, are made to take a long firm stand to return in triumph.

These robust and reliable partners especially excel in demanding sites. Unparalleled bucket and arm digging forces give DX490LC-7M and DX530LC-7M a heavy blow. Widest undercarriages in class perfectly hold up the weight to take up a neutral, composed stance. All these power find their way with the next lap of the progressive technologies. DX490LC-7M and DX530LC-7M will show you outstanding productivity and performance to handle the most severe, heavy duty applications.

Under the pressure, under the weight, these fearless last ditchers will be sculpted on form of success. DX490LC-7M AND DX530LC-7M, the victors to add glory and confidence to your business.

FIERCE PERFORMANCE

DX490LC-7M and DX530LC-7M are powered by Scania electronical engine which delivers superior performance. Impressive breakout force and high traction make penetration easy and allow you to handle the hardest materials. Power and athletic balance of powerful hydraulic systems will make your work quick and efficient.

INTELLIGENT SYSTEM IN RAW ATHLETICISM

DX490LC-7M and DX530LC-7M's functional and intelligent in-and-out design deliver you efficiency and total control. SPC system automatically controls engine RPM to supply proper torque depending on workload to serve best fuel efficiency. Unique and future-oriented connectivity harmoniously interact with intelligent assistance systems.

ENHANCED COMFORT WITH BUILT TO STAND STILL

The widest undercarriages in the 50 ton class hold DX490LC-7M and DL530LC-7M up tightly to give a composed stance. Reinforced castings and forged steel pivot points go together with heavy-duty arm and boom to withstand high-impact materials. Large, robust boom and arm cylinders are equipped for smooth and powerful operation.

WE ARE BACK WITH NEW FEATURES

All the nice features of previous model bodily succeeded, even nicer things to come.

HEATING AND COOLING SEAT (OPTIONAL)
The optional, air- suspended, climatized driver's suspension seat provides pleasant seating conditions and a high level of comfort.

REINFORCED BOOM AND ARM
Reinforced castings and forged steel pivot points. Reinforced heavy-duty arm and boom with new optional boom floating system. To better protect the base of the arm, reinforced bars have been added and the arm center and end boss have been strengthened.

HEAVY-DUTY UNDERCARRIAGE
Heavy duty X- shaped undercarriage with integrated track spring and idler. Offered with durable box section track frame. The sprocket structure and tooth have been strengthened to prevent debris and increase durability.

WATER SEPARATOR
A filter-type high-performance water separator effectively filters moisture out in the fuel, reducing impurities and helping minimize engine issues.

LARGE CAPACITY BUCKETS
Bucket robustness fortified by increased the area of the abrasion resistant plate. Selectable up to 3.8m^3 to fit a variety of applications.

DOOSANCONNECT® TELEMATICS SERVICE (OPTIONAL)
Offering 'preventive maintenance service' based on machine operating data. Providing an expert level consultation to dealers. Functioning as fleet management tool for the customers.

ADDITIONAL LED WORKING LAMP (OPTIONAL)
New additional LED working lamp contributes to enhanced safety through improved illumination.

AIR COMPRESSOR (T3 ONLY)
Easily lubricated, highly reliable and low maintenance air compressors are equipped.

ETP (ELECTRIC TRANSFER PUMP) (OPTIONAL)
Electric transfer pump enables to change speed of front movement depending on the hydraulic flow consumption of linked attachment. Upgraded operational ease guarantees linear and smooth movement of attachment.

ROPS CABIN (OPTIONAL)
The ROPS certified cab provides you with a safe working environment. It also one of the most spacious cabs in the market, with low noise & vibration levels and excellent all-around visibility.

SINGLE CATWALK (OPTIONAL)
Makes maintenance safe and easy. The upper structure features a larger anti-slip surface for greater safety.

*Option spec info is included to the images contained in this material and may not be the same with the actual specs.

NATURAL BORN PREDATOR

Peerless Power, Fearless Performance Pushing the Boundaries of Excavator Through the Limit

Challenge what's possible. DX490LC(A)-7M and DX530LC(A)-7M deliver raw athleticism for you to take even the heaviest work with ease. Construction projects, mass excavation, heavy-duty mining or whatever your role is, supercharged Doosan in-house engine provides excellent force and torque characteristics. Incomparable lifting capacity and improved swing torque provides faster cycle time. Push harder and dig deeper with high lifting capacity and stability.

Another key for performance ascent is the innovative combination of smart features. A redesigned EPOS hydraulic system ensures the engine power to be exactly delivered with an attractive cost-performance ratio. Optionally available electronically controlled hydraulic pump efficiently changes speed of front movement depending on the hydraulic flow consumption of attachment usage. Take the control of untamed. DX490LC(A)-7M and DX530LC(A)-7M would show wide range of performance to let you adjust it on your term.

SWING DRIVE

Swing drive minimizes shock during rotation, while making increased torque available to ensure rapid cycles.

EPOS™ (ELECTRONIC POWER OPTIMIZING SYSTEM)

The smart EPOS™ provides a perfectly synchronized communication link between the engine's electronic control unit and the hydraulic system. A CAN (Controller Area Network) system enables a constant flow of information between the engine and hydraulic system, to ensure power is delivered exactly as needed.

DOOSAN ENGINE (DX12)

The DX12 is a whole new mechanical engine built on Doosan's continuously evolving engine technology. Greater engine outputs of 181kw and impressive torque enables to precisely deliver the power you need. Our many years of experience in engine design and production have resulted in both efficient and powerful engine. Delivering greater engine output through various system improvements.

SUPERIOR AND SUSTAINABLE POWER – T3

The DX490LC-7M and DX530LC-7M is powered by economic and powerful Scania DC13 engine. Advanced DC13 engine delivers a superior performance. High-pressure fuel injection and precise timing provide optimized fuel consumption. High power and wide torque range at low RPM, which can also reduce the strain on the clutch and transmission. Delivering performance which can be adapted to your various needs, for maximum productivity.

HYDRAULIC PUMP

Electronically control the pump by generating virtual hydraulic flow, which effectively works on effectively reduce fuel consumption and high productivity. This control enables to change speed of front movement depending on the hydraulic flow consumption of linked attachment. Upgraded operational ease guarantees linear and smooth movement of attachment. Hydraulic flow can be controlled by the intuitive button or switch.

TIME-HONORED DURABILITY

Structure Honed and Perfected for Countless Time

Strive for perfection. DX490LC(A)-7M and DX530LC(A)-7M are nature born pioneers who have challenged the difficult work by optimized structure. The exceptionally long and wide undercarriage, allow the operator to perform tough and heavy workloads in the most stable manner. Durable materials and extensive testing ensure long-term reliability. The D-profile frame and x-chassis adds strength, while the arm assembly is reinforced for longer life. Increased lifespan of components by improved abrasion-resistance and additional protection.

Collection of all virtues accumulated by Doosan's history, DX490LC(A)-7M and DX530LC(A)-7M offer outstanding quality underpinned by unflagging engineering and extensive testing. Enhanced durability achieved through applying highly robust materials to structures of overall frames. Lasting technology and structural design completed by thorough analysis, enable Doosan's equipments to last under the harshest conditions.

EM BUSHING
The boom pivot is made with a highly lubricated metal to increase the lifespan and extend greasing intervals to 250 hours. cancellation and anti seizure property. Used polymer shim with hard metal disk for less abrasion.

ABRASION-RESISTANT ARM END DISK
New disks have been adopted to increase wear resistance and service intervals.

INTEGRATED TRACK SPRING AND IDLER
The track spring and idler have been joined directly for even greater durability and improved maintenance convenience. The reinforced idler frame, track links and bottom rollers are built to withstand tough conditions for improved durability and reliability in demanding applications.

HEAVY DUTY UNDERCARRIAGE
Advanced undercarriage with strengthen sprocket structure and tooth. Offering increased durability by providing additional protection to the underside of the machine in tough applications – preventing damage from rock and debris .Heavy duty X- shaped undercarriage ensures optimum structural integrity and durability. Cast steel heavy-duty sprockets guarantee the highest resistance and thick and solid plates providing maximum durability in harsh conditions.

LARGER AND WIDER TRACK
DX490LC(A)-7M and DX530LC(A)-7M (Retracted Track optional) are equipped with tracks that is up to 3.9 m wider and up to 5.5 m longer, contributing to greater safety and productivity.

Heavy Duty Boom and Arm

A. CENTER BOSS PLATE
Size increased 40%

B. BOOM END BRACKET
Single piece of casting type

C. ARM BOTTOM PLATE
Increase plate thickness 20%

D. ARM SIDE PLATE
Increase plate thickness 15%

E. HEAVY DUTY BUCKET
New larger bucket

F. BOOM PLATE
Increase boom foot height and decrease width Increase plate thickness 15%

FUEL RESTRAINT EQUALS SAVINGS

Unwavering commitment to Efficiency and Sustainability

DX490LC(A)-7M and DX530LC(A)-7M offers the best conditions for delivering performance in the most cost-effective way. With reliable technology geared to the task, low fuel consumption and the accumulated experiences. Advanced systems combined with innovative integration, result in significantly increased performance and fuel efficiency.

Broad range of powertrain options and transmission provide an efficient delivery of power on various terrains and conditions. A standard auto-idle feature which automatically puts the engine and pump into the standby mode when it detects a pause. Doosan's engine and pump matching technology, not only economical but also environmentally responsive with significantly reduced exhaust fumes. DX490LC(A)-7M and DX530LC(A)-7M's comprehensive range of innovative technology ensure you to do more with low fuel consumption and overall operating costs.

PUMP MATCHING TECHNOLOGY

Pump matching technology resolves problems as the low response time of the system and unnecessary fuel consumption. Matching the response time between pump and engine efficiently reduces unnecessary fuel consumption as well as reducing exhaust fumes.

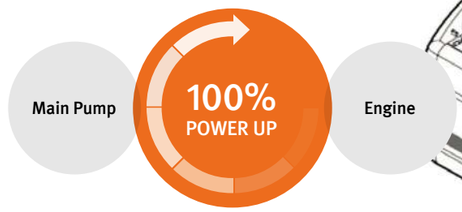

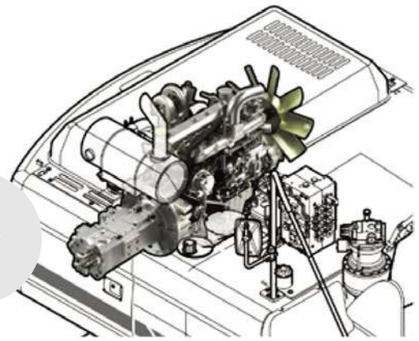

RELIEF CUTOFF

DX490LC(A)-7M and DX530LC(A)-7M is equipped with a relief cutoff system. The system automatically detects excess hydraulic pressure in the cylinder and controls it by redirecting the hydraulic flow back to the main pump. Relief cutoff system distributes excessive pressure in hydraulic components to be maintained in the optimal state.

AUTO IDLE

A standard auto-idle feature reduces engine rpm when the steering wheel or joystick isn't being used. The system automatically puts the engine and pump into the standby mode when it detects a pause during operation. The engine will be automatically switched off when the machine is inactive for a pre-set amount of time. This function helps reduce fuel consumption and noise.

POWER MODE

(P+mode / P mode / S mode / E mode) Four different power modes give you precise control over the excavator's powertrain. The system automatically identifies working mode and adjusts engine RPM to supply proper pump torque. Potential fuel consumption significantly reduced compared to permanently maintaining the same mode.

IN COMFORT, IN CONTROL

Your Workstation with Form and Function

Versatility to meet all your needs, while the exemplary levels of comfort are complemented by a range of innovative features. DX490LC(A)-7M and DX530LC(A)-7M include a wide range of features you could possibly need for your task. Designed to meet operational need thoroughly, the high-definition display control lever and other intuitive features brings absolute controllability in your fingertips.

For both bodily comfort and peace of mind, Enjoy your enhanced personal space with completely re-designed cabin interior with climate control systems, air suspension seat and various convenient features. All elements provided to ensure the operator to work in safe and comfortable condition no matter the work site is. Work will be altogether more pleasant with DX490LC(A)-7M and DX530LC(A)-7M's cabin, optimally prepared for both energetic work and relaxed break.

1. SMALL DETAILS ADD THE FEELING OF REFINEMENT

Heating and ventilation, air conditioning system upgraded for pleasant environment. USB charger is equipped for additional comfort. Rear sun visor is also equipped for UV protection.

2. SPACIOUS CABIN COMFORT

Refined interior with enhanced legroom and extendable storage space guarantees a serene ride to you. A more orderly interior equipped with thoroughly changed comfort accessories. This ensures operator to have a clear and uncluttered workplace at all times.

3. HEATING AND COOLING SEAT (OPTIONAL)

The optional, air-suspended, climatized driver's suspension seat provides pleasant seating conditions and a high level of comfort. Heating and cooling temperature range segmented in three stage to meet various customer needs.

4. ADDITIONAL LED WORKING LAMP (OPTIONAL)

New additional LED working lamp contributes to enhanced safety through improved illumination. 2 ea(only front side) and 6 ea selectable.

5. CONTROL LEVER

Precise control of the equipment increases versatility, safety and facilitates tricky operations requiring great precision. Leveling operations and the movement of lifted load made easier and safer.

6. AVM (AROUND VIEW MONITOR) (OPTIONAL)

The images can be viewed on a monitor in the interior of the cab. The operator can directly view the area around equipment, when changing implements. Also can have a perfect view of the front structure.

7. 8-INCH MONITOR

New, wider and more user-friendly LCD color monitor with full access to machine settings and maintenance data.

8. SIMPLE OPERATION

Precise control of the equipment increases versatility, safety and facilitates tricky operations requiring great precision. Leveling operations and the movement of lifted load made easier and safer. Joystick and switches integrated in control stand for precise operation.

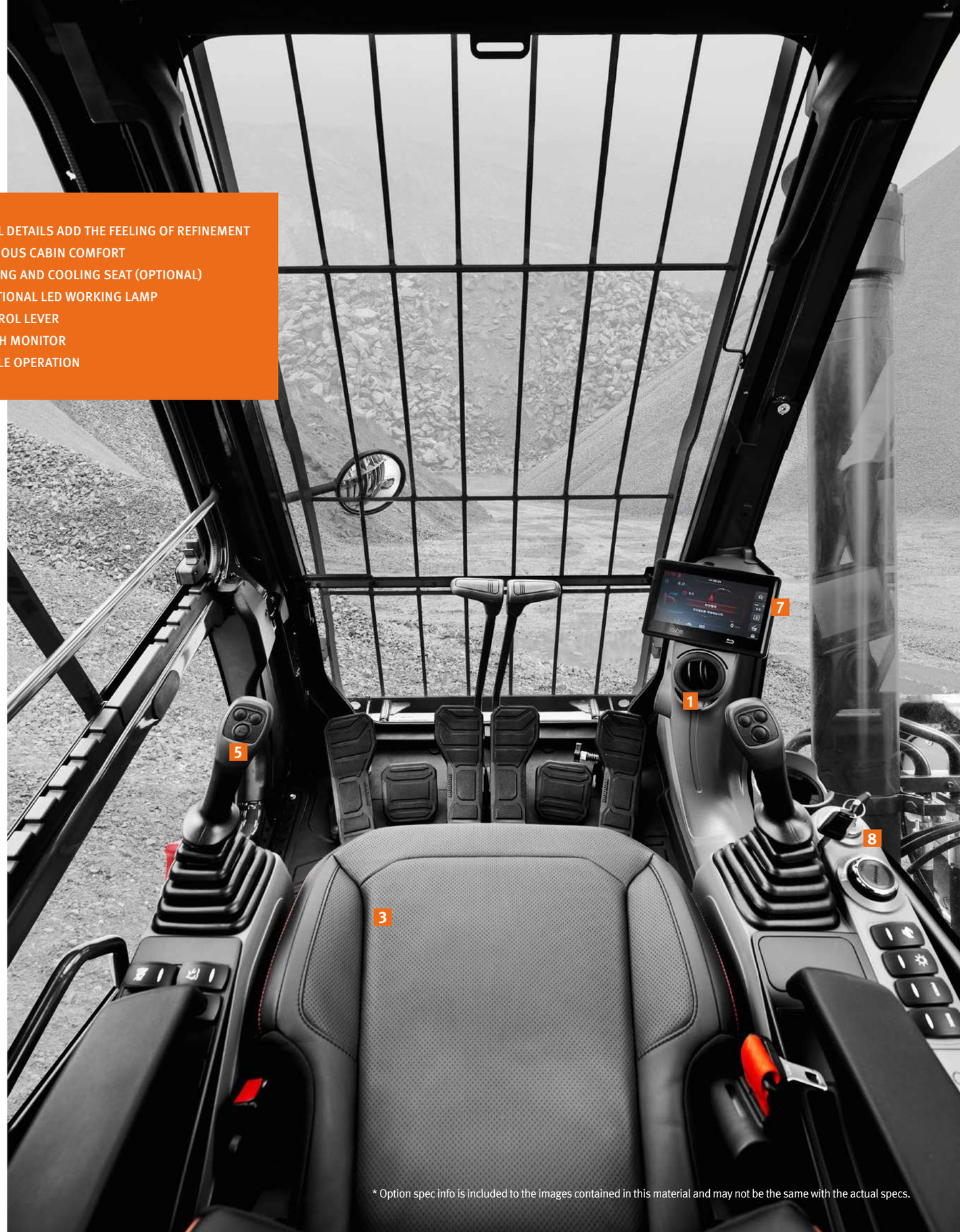

* Option spec info is included to the images contained in this material and may not be the same with the actual specs.

LONG SERVICE WITH MINIMUM UPKEEP

Keep Your Engine Turning, Without Maintenance Stress

We understand that you have a task to complete in time. DX490LC(A)-7M and DX530LC(A)-7M are made up of high quality and low maintenance components to fit your needs. Flexible upkeep and repair options, as well as planned servicing, would extend the life of your excavator.

Key maintenance areas are easy to access and centralized grease inlets are designed for simple routine maintenance. Extensive service network and expert assistance are also readily available, DoosanCONNECT provides you the operational machine data in an hourly cycle and broad range of service to get the most productivity out of your equipment. Doosan helps you make the most of tyour time.

1

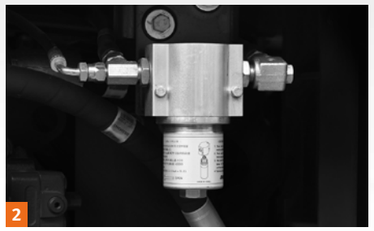

2

3

4

1. SINGLE CATWALK FOR SAFE MAINTENANCE

Large guard rails are installed along with anti-slip step and plates. Assuring operator's safety during the working hour and offering easy access to the whole upper structure.

2. HYDRAULIC OIL RETURN FILTER

Protection of the hydraulic system has been made more effective by applying glass fiber filter technology to the main oil return filter. More than 99.5% of foreign particles are filtered out, significantly increasing oil change interval.

3. FUEL PRE-FILTER IN WATER SEPARATOR

Highly efficient water separator in fuel to prevent engine damage by removing moisture. Reducing the risk of external engine contamination and lengthen the engine's lifespan.

4. CENTRALIZED GREASE INLETS FOR EASY MAINTENANCE

The boom & arm grease inlets are grouped for easy access. Remote grease points make it easier to lubricate hard-to-reach pins on the lift arm and articulation system

5

7

6

8

5. DRY TYPE PRE-CLEANER

The installation of a rotor type pre-cleaner provides better filtering in dusty environments. Increase maintenance interval resulting in more uptime.

6. AIR COMPRESSOR (ELEC. ENGINE ONLY)

Easily lubricated, highly reliable and low maintenance air compressors are equipped.

7. CONVENIENT FUSE BOX

The fuse box is conveniently located in a section of the storage compartment behind the operator's seat to provide a clean environment and easy access.

8. AIR CLEANER

Air cleaner of large capacity removes 99% of airborne particles, reducing the risk of engine contamination.

DoosanCONNECT® Telematics Service (OPTIONAL)

TELECOMMUNICATIONS Data flow from machine to web

TELEMATICS SERVICE TERMINAL

Telematics Service terminal is installed to machine / connected to EPOS™

TELECOMMUNICATION

GPS, EPOS™ data is sent to sedignated server by GSM, Satellite telecommunication

DOOSAN TELEMATICS SERVICE WEB

Doosan, Dealer, Customer can easily monitor the GPS, EPOS™ data from Core Telematics Service web

TELEMATICS SERVICE BENEFITS Doosan and dealer support customers to improve work efficiency with timely and responsive services

CUSTOMER

Improve work efficiency
- Timely and preventive service
- Improve operator's skills by comparing work pattern
- Manage fleet more effectively

DEALER

Better service for customers
- Provide better quality of service
- Maintain machine value
- Better understanding of market needs

DOOSAN

Responsive to customer's voice
- Utilize quality-related field data
- Apply customer's usage profile to deveping new machine

FUNCTIONS(WEB/APP) Doosan Telematics Service provides various functions to support your great performance

• GPS

• Fuel information

• Preventive maintanance

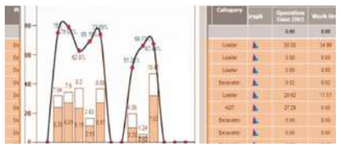

• Operation hours

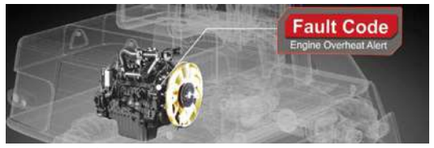

• Fault code/warning

• ADT Productivity

• Reports

FUNCTION		EXCAVATOR	WHEEL LOADER	ADT
GPS	· Location · Geo-fence	All models	All models	All models
Operation hours	· Daily, Weekly, Monthly report	All models	All models	All models
Operation hours	· Total operation hours · Operation hours by mode	All models	All models	All models
Maintenance parts	· Preventive maintenance by item replacement cycle	All models	All models	All models
Fault code/ Warning	· Fault code · Machine Warnings on Gauge Panel	All models	All models	All models
Fuel information	· Fuel level · Fuel consumption	All models	All models	All models
Dump capacity	· Dump tonnage · Count of Work Cycle	N/A	N/A	All models

Some features may be districted, depending the models and regions. For more information, please contract your regional dealer

GLOBAL PARTS NETWORK

QUALITY-PROVEN MAIN COMPONENTS

Doosan provides fast and precise worldwide delivery of genuine Doosan parts through its global PDC (parts distribution center) network.

GLOBAL NETWORK

The global network of the GPDC (Global Parts Distribution Center) maximizes its supply rate by making sure that each center is stockpiled with all the critical parts required for businesses in its area. The network also minimizes the time and costs required for parts delivery by positioning PDCs close to major markets around the world. Doosan PDCs communicate with customers in their time zone, informing them that they are open for operation, and deliver parts to them as early as possible.

THE GLOBAL PARTS DISTRIBUTION CENTER NETWORK

PDCs had been set up as shown below, including Mother PDC in Ansan, Korea. The eight other PDCs include one in China (Yantai), three in USA (Seattle, Atlanta and Miami), two in Europe (Germany and the UK), one in the Middle East (Dubai) and one in Asia (Singapore).

PDC BENEFIT

Distribution Cost Reduction

Maximum Parts supply rate

Shortest distance/ time parts delivery

Real-time service support

Minimum downtime

DIMENSIONS (DX490LC(A)-7M/DX530LC(A)-7M)

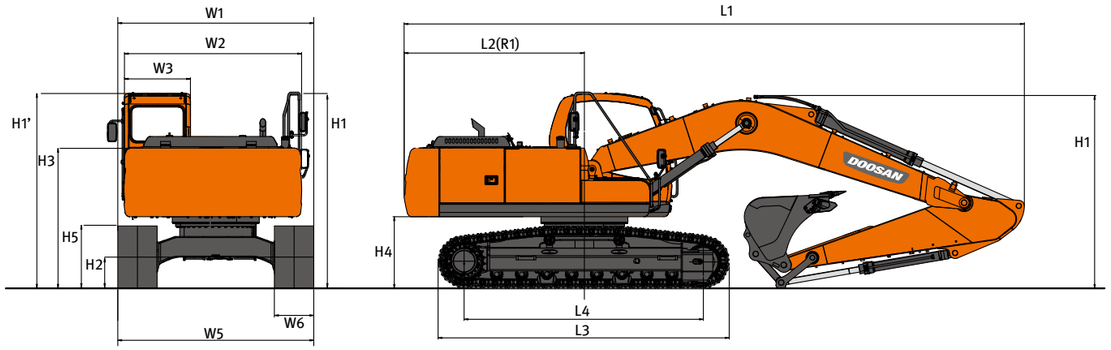

VARIABLE TRACK

Model				DX490LC(A)-7M/DX530LC(A)-7M [metric]						
Dimension				490 STD/ 530 OPT2	490 OPT1/ 530 OPT3	490 OPT2/ 530 OPT4	530 STD	530 OPT1	530 OPT5	530 OPT6
Boom				m	7.1 HD	7.1 HD	7.1	6.3	6.3	9.0	11.0
Arm				m	3.35 HD	2.9	3.98	2.9	2.4	6.0	8.0
Bucket (PCSA)				m^3	2.35/2.6 R2H	2.6/2.72 R2H	2.07 R2H	3.28 R2H	3.2	1.27 GP	0.92 GP
Undercarriage (Track+Grouser)				mm	3.9 M 600 TG						
Overall	L1	Overall Length		mm	12,220	12,325	12,300	11,530	11,720	14,150	16,190
	H1	Overall Height	Boom	mm	3,575	3,775	3,830	4,140	4,030	3,765	3,935
			Hose	mm	3,680	3,865	3,920	4,185	4,075	3,905	4,070
			Cabin	mm	3,360	3,360	3,360	3,360	3,360	3,360	3,360
	W1	Overall Width (SHIPPING)**	Extended	mm	4,100	4,100	4,100	4,100	4,100	4,100	4,100
			Retracted	mm	3,577	3,577	3,577	3,577	3,577	3,577	3,577
	R1	Rear Swing Radius		mm	3,800	3,800	3,800	3,800	3,800	3,800	3,800
	H2	Ground Clearance*		mm	*725	*725	*725	*725	*725	*725	*725
Swing Body	W2	House Width	Frame only	mm	2,990	2,990	2,990	2,990	2,990	2,990	2,990
			w/Catwalk	mm	3,296	3,296	3,296	3,296	3,296	3,296	3,296
			w/Protector	mm	3,352	3,352	3,352	3,352	3,352	3,352	3,352
	W3	Cabin Width		mm	1,010	1,010	1,010	1,010	1,010	1,010	1,010
	H3	Height Over Cover		mm	2,507	2,507	2,507	2,507	2,507	2,507	2,507
	H4	Counterweight Clearance*		mm	*1,424	*1,424	*1,424	*1,424	*1,424	*1,424	*1,424
Undercarriage	H5	Track Height*		mm	*1,195	*1,195	*1,195	*1,195	*1,195	*1,195	*1,195
	L3	Track Length		mm	*5,480	*5,480	*5,480	*5,480	*5,480	*5,480	*5,480
	L4	Tumbler Distance		mm	4,470	4,470	4,470	4,470	4,470	4,470	4,470
	W5	Undercarriage Width***	Extended	mm	4,100	4,100	4,100	4,100	4,100	4,100	4,100
			Retracted	mm	3,540	3,540	3,540	3,540	3,540	3,540	3,540
	W6	Shoe Width		mm	600	600	600	600	600	600	600
		Grouser Height		mm	36	36	36	36	36	36	36
CAB	-	Cabin Height (H1' - H3)		mm	853	853	853	853	853	853	853

* : without grouser
** : EXTENDED / RETRACTED (include side steps. If it excludes side steps, 3,900 / 3,477)
*** : EXTENDED / RETRACTED (include side steps. If it excludes side steps, 3,900 / 3,340)

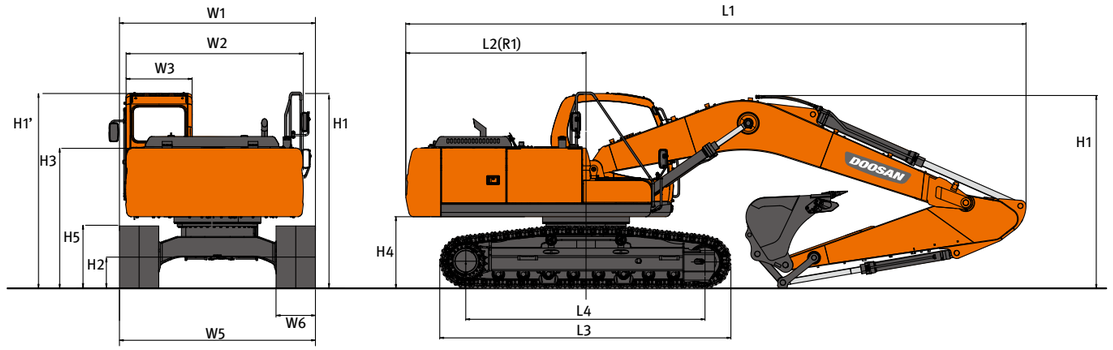

FIXED TRACK

Model				DX490LC(A)-7M/DX530LC(A)-7M [metric]				
Dimension				OPT	OPT	OPT	OPT	OPT
Boom			m	7.1	7.1	7.1	6.3	6.3
Arm			m	3.35	2.9	3.98	2.4	2.9
Bucket (PCSA)			m^3	2.6 R2H	2.72 R2H	2.07 R2H	2.91 R2H	2.91 R2H
Undercarriage (Track+Grouser)			mm	Fixed - 600 TG				
Overall	L1	Overall Length	mm	12,280	12,345	12,325	11,730	11,520
	H1	Overall Height Boom	mm	3,575	3,775	3,830	3,975	4,140
		Overall Height Hose	mm	3,680	3,865	3,920	4,020	4,185
		Overall Height Cabin	mm	3,210	3,210	3,210	3,210	3,210
	W1	Overall Width (SHIPPING) **	mm	3,510	3,510	3,510	3,510	3,510
	R1	Rear Swing Radius	mm	3,800	3,800	3,800	3,800	3,800
	H2	Ground Clearance*	mm	*530	*530	*530	*530	*530
Swing Body	W2	House Width Frame only	mm	2,990	2,990	2,990	2,990	2,990
		House Width w/Catwalk	mm	3,296	3,296	3,296	3,296	3,296
		House Width w/Protector	mm	3,352	3,352	3,352	3,352	3,352
	W3	Cabin Width	mm	1,010	1,010	1,010	1,010	1,010
	H3	Height Over Cover	mm	2,356	2,356	2,356	2,356	2,356
	H4	Counterweight Clearance*	mm	*1,273	*1,273	*1,273	*1,273	*1,273
Undercarriage	H5	Track Height*	mm	*1,070	*1,070	*1,070	*1,070	*1,070
	L3	Track Length	mm	*5,480	*5,480	*5,480	*5,480	*5,480
	L4	Tumbler Distance	mm	4,475	4,475	4,475	4,475	4,475
	W5	Undercarriage Width ** STD	mm	3,408	3,408	3,408	3,408	3,408
	W6	Shoe Width	mm	600	600	600	600	600
		Grouser Height	mm	36	36	36	36	36
CAB	-	Cabin Height (H1 - H3)	mm	853	853	853	853	853

* : without grouser
** : STD (include side steps. If it excludes side steps, STD is 3,481)
*** : STD (include side steps. If it excludes side steps, STD is 3,350)

WORKING RANGES (DX490LC(A)-7M/DX530LC(A)-7M)

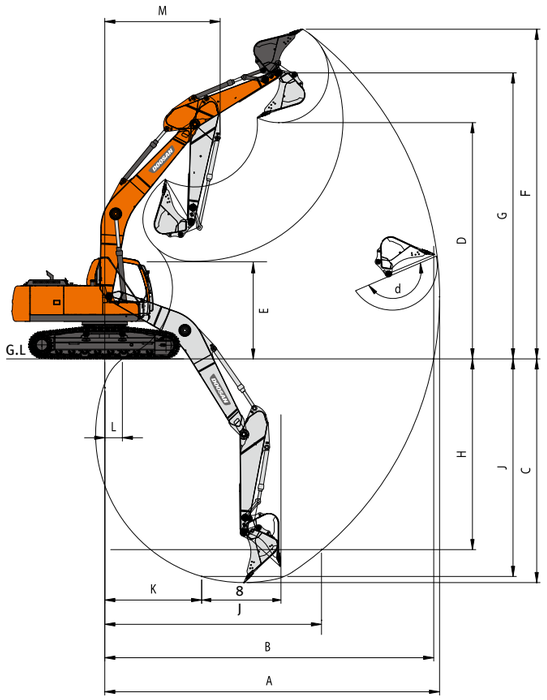

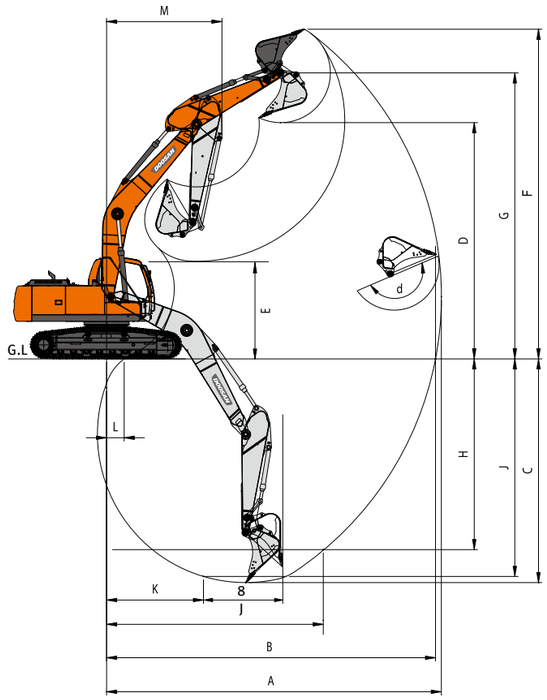

VARIABLE TRACK

BOOM LENGTH		mm	7,100 (HD)			6,300		9,000	11,000
ARM TYPE		mm	3,350 (HD)	2,900	3,980	2,400	2,900	6,000	8,000
	BUCKET TYPE (SAE / PCSA)	m^3	2.35 R2H	2.60 R2H	2.07 R2H	3.28 R2H	2.91 R2H	1.27	0.92
A	MAX. DIGGING REACH	mm	12,125	11,720	12,670	10,305	10,735	16,060	19,615
B	MAX. DIGGING REACH (GROUND)	mm	11,865	11,455	12,425	10,000	10,445	15,870	19,455
C	MAX. DIGGING DEPTH	mm	7,790	7,340	8,405	6,260	6,755	11,795	15,125
D	MAX. DUMPING HEIGHT	mm	7,865	7,725	8,025	6,650	6,750	9,800	11,890
E	MIN. DUMPING HEIGHT	mm	3,310	3,580	2,510	3,505	2,980	2,076	1,465
F	MAX. DIGGING HEIGHT	mm	11,050	10,920	11,205	9,495	9,630	12,755	14,435
G	MAX. BUCKET PIN HEIGHT	mm	9,690	9,550	9,850	8,455	8,555	11,415	13,355
H	MAX. VERTICAL WALL DEPTH	mm	4,370	4,045	4,930	590	1,155	10,300	12,805
I	MAX. RADIUS VERTICAL	mm	9,970	9,710	10,235	9,845	10,095	9,515	12,165
J	MAX. DIGGING DEPTH(8'LEVEL)	mm	7,635	7,165	8,265	6,020	6,535	11,670	15,010
K	MIN. RADIUS 8' LINE	mm	3,895	3,885	3,905	3,195	3,175	4,885	6,165
L	MIN. DIGGING REACH	mm	840	2,010	50	2,015	1,160	-109	40
M	MIN. SWING RADIUS	mm	5,210	5,235	5,185	4,740	4,715	6,525	7,825
d.	BUCKET ANGLE (DEG)	°	189.1	181.2	180.9	184.5	186.2	175.2	177.6

FIXED TRACK

BOOM LENGTH		mm	7,100 (HD)			6,300	
ARM TYPE		mm	3,350 (HD)	2,900	3,980	2,400	2,900
	BUCKET TYPE (SAE / PCSA)	m^3	2.35 R2H	2.60 R2H	2.07 R2H	3.28 R2H	2.91 R2H
A	MAX. DIGGING REACH	mm	12,125	11,720	12,670	10,305	10,735
B	MAX. DIGGING REACH (GROUND)	mm	11,895	11,485	12,455	10,030	10,475
C	MAX. DIGGING DEPTH	mm	7,940	7,490	8,555	6,410	6,905
D	MAX. DUMPING HEIGHT	mm	7,715	7,575	7,875	6,500	6,600
E	MIN. DUMPING HEIGHT	mm	2,980	3,430	2,360	3,355	2,830
F	MAX. DIGGING HEIGHT	mm	10,900	10,770	11,055	9,345	9,480
G	MAX. BUCKET PIN HEIGHT	mm	9,540	9,400	9,700	8,305	8,405
H	MAX. VERTICAL WALL DEPTH	mm	4,520	4,195	5,080	740	1,305
I	MAX. RADIUS VERTICAL	mm	9,970	9,710	10,235	9,845	10,095
J	MAX. DIGGING DEPTH(8'LEVEL)	mm	7,785	7,315	8,415	6,170	6,685
K	MIN. RADIUS 8' LINE	mm	3,895	3,885	3,905	3,195	3,175
L	MIN. DIGGING REACH	mm	1,055	2,195	200	2,165	1,310
M	MIN. SWING RADIUS	mm	5,210	5,235	5,185	4,740	4,715
d.	BUCKET ANGLE (DEG)	°	189.1	181.2	180.9	184.5	186.2

TECHNICAL SPECIFICATION (DX490LCA-7M)

ENGINE

Model

Doosan DX12
4-cyclewater-cooled waste gate turbocharge mechanical direct injection. The emission levels are well below the values required for phase II.

Number of cylinders

6

Nominal flywheel power

GROSS POWER
257 kW (350PS, 344.5HP) @ 1,800 rpm (SAE J1995)
NET POWER
253 kW (343PS, 339.1HP) @ 1,800 rpm (SAE J1349)

Max torque

158.1 kgf.m @ 1,200 rpm

Piston displacement

11,051 cc (674 cu.in)

Bore & stroke

123 mm x 155 mm (4.8" x 6.1")

Starter

24 V / 7.0 kW

Batteries

2 X 12 V / 200 Ah

Air cleaner

Double element with auto dust evacuation.

HYDRAULIC CYLINDERS

The piston rods and cylinder bodies are made of high-strength steel. A shock absorbing mechanism is fitted in all cylinders to ensure shockfree operation and extend piston life.

Cylinders	Quantity	Bore x Rod diameter x stroke
Boom	2	170 x 115 x 1,650 mm
Arm	1	190 x 130 x 1,980 mm
Bucket	1	170 x 115 x 1,341 mm

ENVIRONMENT

Noise levels comply with environmental regulations (dynamic values).

Sound level guarantee

108 DB (A) (2000/14/EC)

Cab sound level

74 DB (A) (ISO 6396)

HYDRAULIC SYSTEM

The heart of the system is the EPOS™ (Electronic Power Optimizing System). It allows the efficiency of the system to be optimized for all working conditions and minimizes fuel consumption.

- The hydraulic system enables independent or combined operations.
- Two travel speeds offer either increased torque or high speed tracking.
- Cross-sensing pump system for fuel savings.
- Auto deceleration system.
- Two operating modes, two power modes.
- Button control of flow in auxiliary equipment circuits.
- Computer-aided pump power control.

Main pumps

2 variable displacement axial piston pumps
Max flow: 2 x 390 l/min

Pilot pump

Gear pump - max flow: 24 l/min

Maximum system pressure

Front
Normal mode : 324 kgf/cm²
Power mode : 343 kgf/cm²
Travel : 324 kgf/cm²
Swing : 300 kgf/cm²

SWING MECHANISM

- An axial piston motor with two-stage planetary reduction gear is used for the swing.
- Increased swing torque reduces swing time.
- Internal induction-hardened gear.
- Internal gear and pinion immersed in lubricant bath.
- The swing brake for parking is activated by spring and released hydraulically.

Swing speed : 0 to 9.0 rpm

UNDERCARRIAGE

Chassis are of very robust construction, all welded structures are designed to limit stresses. High-quality material used for durability. Lateral chassis welded and rigidly attached to the undercarriage. Track rollers lubricated for life, idlers and sprockets fitted with floating seals.

Number of rollers and track shoes per side

Upper rollers : 2 (SINGLE) & 1 (SHAFT), Variable Track
2 (SHAFT), Fixed Track
Lower rollers: 9
Shoes : 53
Total length of track : 5,480 mm (17' 9")

DRIVE

Each track is driven by an independent axial piston motor through a planetary reduction gearbox. Two levers with control pedals guarantee smooth travel with counter rotation on demand.

Travel speed (fast/slow)

5.5 / 3.1 km/h

Maximum traction force

3.7 / 21.0 ton.f (363 / 206 kN)

Maximum grade

70 (35%)

BUCKET DIGGING FORCE

DX490LC(A)-7M, DX530LC(A)-7M

Bucket Type	Capacity (m³)		Bucket Width (mm)		DIGGING FORCE (NOM/PRESS UP, TON)
	CECE	SAE	W/Cutter	W/O Cutter	
GP	1.89	2.14	1,682	1,588	[SAE] 25.8 / 27.4 [ISO] 29.0 / 30.8
	2.1	2.39	1,837	1,744	
	2.5	2.86	2,130	2,037	
GP(Rock)	1.48	1.71	-	1,572	[SAE] 25.7 / 27.3 [ISO] 30.7 / 32.6
R2H	1.87	2.07	1,416	1,382	[SAE] 25.3 / 26.8 [ISO] 28.2 / 29.9
	2.11	2.35	1,566	1,532	
	2.32	2.60	1,666	1,700	
	2.43	2.72	1,766	1,732	
	2.59	2.91	1,866	1,832	
	2.90	3.28	2,066	2,032	
	3.18	3.60	2,069	2,062	
	3.35	3.80	2,196	2,162	
R2H+	2.90	3.28	2,066	2,032	
R2S	1.76	1.94	-	1,350	
	2.00	2.22	-	1,500	
	2.32	2.59	-	1,700	
	2.48	2.78	-	1,800	
	2.79	3.15	-	2,000	
R2X	1.76	1.94	-	1,370	
	2.00	2.22	-	1,520	
	2.32	2.59	-	1,720	
	2.48	2.78	-	1,820	

ARM DIGGING FORCE

BOOM (mm)	ARM	LENGTH (mm)	WEIGHT (kg)	DIGGING FORCE (NOM/PRESS UP, TON)
Standard Heavy Duty Short	STD	3,350	1,684	[SAE] 21.0 / 22.2, [ISO] 21.3 / 22.6
	HEAVY DUTY	3,350	1,775	[SAE] 21.0 / 22.2, [ISO] 21.3 / 22.6
	SHORT	2,900	1,655	[SAE] 23.8 / 25.3, [ISO] 24.3 / 25.7
	LONG	3,980	1,831	[SAE] 18.9 / 20.0, [ISO] 19.0 / 20.2
6,300	SHORT	2,400	1,462	[SAE] 27.6 / 29.2, [ISO] 28.2 / 29.9
	SHORT	2,900	1,655	[SAE] 23.8 / 25.3, [ISO] 24.3 / 25.7

REFILL CAPACITIES

Fuel tank

626 L (165.4 US gal)

Cooling system (Radiator capacity)

56.5 L (14.9 US gal)

Engine oil

31 L (8.2 US gal)

Swing drive

2 X 5 L (2 X 1.32 US gal)

Final drive
(each =Travel Device = travel motor + travel reduction gear)

2 X 9 L (2 X 2.38 US gal)

Hydraulic tank

390 L (103 US gal)

WEIGHT

Shoe Width (mm)	Ground Pressure kgf/cm² (psi)	Machine Weight (ton)
STD. 600TG	0.89 (12.7)	51.0
OPT. 750TG	0.72 (10.2)	52.0
OPT. 800TG	0.68 (9.7)	52.2
OPT. 900TG	0.61 (8.7)	52.8
OPT. 600DG	0.89 (12.7)	51.0

*with wide variable track

Shoe Width (mm)	Ground Pressure kgf/cm² (psi)	Machine Weight (ton)
STD. 600TG	0.84 (11.9)	48.4
OPT. 750TG	0.69 (9.8)	49.4
OPT. 800TG	0.65 (9.2)	49.6
OPT. 900TG	0.58 (8.2)	50.2
OPT. 600DG	0.84 (11.9)	48.4

*with fixed track

TECHNICAL SPECIFICATION (DX490LC-7M)

ENGINE

Model

SCANIA DC13
4-cycle, water-cooled Waste gate conrolled turbocharger, Unit injector . The emission levels are well below the values required for phase III.

Number of cylinders

6

Nominal flywheel power

GROSS POWER
294 kW (399.7PS, 394.2HP) @ 1,800 rpm (SAE J1995)
NET POWER
289 kW (392.9PS, 387.6HP) @ 1,800 rpm (SAE J1349)

Max torque

1930 Nm @ 1,400 rpm

Piston displacement

12,700 cc (775 cu.in)

Bore & stroke

Φ 130 mm x 160 mm (5.1" x 6.3")

Starter

24 V / 6.0 kW

Batteries

2 X 12 V / 200 Ah

Air cleaner

Double element with auto dust evacuation.

HYDRAULIC CYLINDERS

The piston rods and cylinder bodies are made of high-strength steel. A shock absorbing mechanism is fitted in all cylinders to ensure shockfree operation and extend piston life.

Cylinders	Quantity	Bore x Rod diameter x stroke
Boom	2	170 x 115 x 1,650 mm
Arm	1	190 x 130 x 1,980 mm
Bucket	1	170 x 115 x 1,341 mm

ENVIRONMENT

Noise levels comply with environmental regulations (dynamic values).

Sound level guarantee

107 DB (A) (2000/14/EC)

Cab sound level

74 DB (A) (ISO 6396)

HYDRAULIC SYSTEM

The heart of the system is the EPOS™ (Electronic Power Optimizing System). It allows the efficiency of the system to be optimized for all working conditions and minimizes fuel consumption.

- The hydraulic system enables independent or combined operations.
- Two travel speeds offer either increased torque or high speed tracking.
- Cross-sensing pump system for fuel savings.
- Auto deceleration system.
- Two operating modes, two power modes.
- Button control of flow in auxiliary equipment circuits.
- Computer-aided pump power control.

Main pumps

2 variable displacement axial piston pumps
Max flow: 2 x 390 l/min

Pilot pump

Gear pump - max flow: 24 l/min

Maximum system pressure

Front
Normal mode : 324 kgf/cm²
Power mode : 343 kgf/cm²
Travel : 324 kgf/cm²
Swing : 300 kgf/cm²

SWING MECHANISM

- An axial piston motor with two-stage planetary reduction gear is used for the swing.
- Increased swing torque reduces swing time.
- Internal induction-hardened gear.
- Internal gear and pinion immersed in lubricant bath.
- The swing brake for parking is activated by spring and released hydraulically.

Swing speed : 0 to 9 rpm

UNDERCARRIAGE

Chassis are of very robust construction, all welded structures are designed to limit stresses. High-quality material used for durability. Lateral chassis welded and rigidly attached to the undercarriage. Track rollers lubricated for life, idlers and sprockets fitted with floating seals.

Number of rollers and track shoes per side

Upper rollers : 2 (SINGLE) & 1 (SHAFT), Variable Track
2 (SHAFT), Fixed Track

Lower rollers: 9
Shoes : 53
Total length of track : 5,480 mm (17' 9")

DRIVE

Each track is driven by an independent axial piston motor through a planetary reduction gearbox. Two levers with control pedals guarantee smooth travel with counter rotation on demand.

Travel speed (fast/slow)

5.5 / 3.1 km/h (4.0 / 2.2 mph)

Maximum traction force

37.0 / 21.0 ton.f (363 / 206 kN)

Maximum grade

70 (35%)

BUCKET DIGGING FORCE

DX490LC(A)-7M, DX530LC(A)-7M

Bucket Type	Capacity (m³)		Bucket Width (mm)		DIGGING FORCE (NOM/PRESS UP, TON)
	CECE	SAE	W/Cutter	W/O Cutter	
GP	1.89	2.14	1,682	1,588	[SAE] 25.8 / 27.4 [ISO] 29.0 / 30.8
	2.1	2.39	1,837	1,744	
	2.5	2.86	2,130	2,037	
GP(Rock)	1.48	1.71	-	1,572	[SAE] 25.7 / 27.3 [ISO] 30.7 / 32.6
R2H	1.87	2.07	1,416	1,382	[SAE] 25.3 / 26.8 [ISO] 28.2 / 29.9
	2.11	2.35	1,566	1,532	
	2.32	2.60	1,666	1,700	
	2.43	2.72	1,766	1,732	
	2.59	2.91	1,866	1,832	
	2.90	3.28	2,066	2,032	
	3.18	3.60	2,096	2,062	
	3.35	3.80	2,196	2,162	
R2H+	2.90	3.28	2,066	2,032	
R2S	1.76	1.94	-	1,350	
	2.00	2.22	-	1,500	
	2.32	2.59	-	1,700	
	2.48	2.78	-	1,800	
	2.79	3.15	-	2,000	
R2X	1.76	1.94	-	1,370	
	2.00	2.22	-	1,520	
	2.32	2.59	-	1,720	
	2.48	2.78	-	1,820	

ARM DIGGING FORCE

BOOM (mm)	ARM	LENGTH (mm)	WEIGHT (kg)	DIGGING FORCE (NOM/PRESS UP, TON)
Standard Heavy Duty Short	STD	3,350	1,684	[SAE] 21.0 / 22.2, [ISO] 21.3 / 22.6
	HEAVY DUTY	3,350	1,775	[SAE] 21.0 / 22.2, [ISO] 21.3 / 22.6
	SHORT	2,900	1,655	[SAE] 23.8 / 25.3, [ISO] 24.3 / 25.7
	LONG	3,980	1,831	[SAE] 18.9 / 20.0, [ISO] 19.0 / 20.2
6,300	SHORT	2,400	1,462	[SAE] 27.6 / 29.2, [ISO] 28.2 / 29.9
	SHORT	2,900	1,655	[SAE] 23.8 / 25.3, [ISO] 24.3 / 25.7

REFILL CAPACITIES

Fuel tank

626 L (165.4 US gal)

Cooling system (Radiator capacity)

53.3 L (14.1 US gal)

Engine oil

45 L (11.9 US gal)

Swing drive

2 X 5 L (2 X 1.32 US gal)

Final drive
(each =Travel Device = travel motor + travel reduction gear)

2 X 9 L (2 X 2.38 US gal)

Hydraulic tank

390 L (103 US gal)

WEIGHT

Shoe Width (mm)	Ground Pressure kgf/cm² (psi)	Machine Weight (ton)
STD. 600TG	0.89 (12.7)	51.0
OPT. 750TG	0.72 (10.2)	52.0
OPT. 800TG	0.68 (9.7)	52.2
OPT. 900TG	0.61 (8.7)	52.8
OPT. 600DG	0.89 (12.7)	51.0

*with wide variable track

Shoe Width (mm)	Ground Pressure kgf/cm² (psi)	Machine Weight (ton)
STD. 600TG	0.84 (11.9)	48.4
OPT. 750TG	0.69 (9.8)	49.4
OPT. 800TG	0.65 (9.2)	49.6
OPT. 900TG	0.58 (8.2)	50.2
OPT. 600DG	0.84 (11.9)	48.4

*with fixed track

TECHNICAL SPECIFICATION (DX490LC(A)-7M)

BUCKET & ARM COMBINATIONS

Track	Wide Variable Track (3.9 m)				C/W (kg)	8,500				
Track Gauge	2,740 / 3,300 (mm) [Retrackted/Extended]				Shoe (mm)	600				
Bucket Type	Capacity (m^3)		Bucket Width (mm)		Weight (kg)	7.1m Boom			6.3m BOOM	
	SAE/PCSA	CECE	W/O Cutter	With Cutter		2.9m ARM	3.35m ARM	3.08m ARM	2.4 m ARM	2.9 m ARM
GP	2.14	1.89	1,588	1,682	1,910	A	A	A	A	A
	2.39	2.10	1,744	1,837	2,027	A	A	A	A	A
	2.86	2.51	2,037	2,130	2,279	B	B	C	A	A
R2H	2.07	1.87	1,382	1,416	1,952	A	A	A	A	A
	2.35	2.11	1,532	1,566	2,121	A	A	A	A	A
	2.60	2.32	1,666	1,700	2,260	A	B	B	A	A
	2.72	2.43	1,732	1,766	2,283	A	B	C	A	A
	2.91	2.59	1,832	1,866	2,411	B	B	C	A	A
	3.28	2.90	2,032	2,066	2,572	C	C	D	A	A
	3.60	3.18	2,062	2,096	2,710	C	D	D	A	B
	3.80	3.35	2,162	2,196	2,826	D	D	-	B	B
R2H+	3.28	2.90	2,032	2,066	2,684	C	C	D	A	A
R2S	1.94	1.76	1,350	-	2,268	A	A	A	A	A
	2.22	2.00	1,500	-	2,408	A	A	A	A	A
	2.59	2.32	1,700	-	2,594	A	B	C	A	A
	2.78	2.48	1,800	-	2,736	B	C	C	A	A
	3.15	2.79	2,000	-	2,922	C	C	D	A	A
R2X	1.94	1.76	1,370	-	2,485	A	A	A	A	A
	2.22	2.00	1,520	-	2,649	A	A	B	A	A
	2.59	2.32	1,720	-	2,930	B	B	C	A	A
	2.78	2.48	1,820	-	3,040	B	C	D	A	A
ROCK	1.71	1.48	1,572	-	2,075	A	A	A	A	A

Track	Wide Variable Track (3.9 m)				C/W (kg)	9,200									
Track Gauge	2,740 / 3,300 (mm) [Retrackted/Extended]				Shoe (mm)	900					600				
Bucket Type	Capacity (m^3)		Bucket Width (mm)		Weight (kg)	7.1m Boom			6.3m BOOM		7.1m Boom			6.3m BOOM	
	SAE/ PCSA	CECE	W/O Cutter	With Cutter		2.9m ARM	3.35m ARM	3.98m ARM	2.4 m ARM	2.9 m ARM	2.9m ARM	3.35m ARM	3.98m ARM	2.4 m ARM	2.9 m ARM
GP	2.14	1.89	1,588	1,682	1,910	A	A	A	A	A	A	A	A	A	A
	2.39	2.10	1,744	1,837	2,027	A	A	A	A	A	A	A	A	A	A
	2.86	2.51	2,037	2,130	2,279	A	A	B	A	A	A	B	B	A	A
R2H	2.07	1.87	1,382	1,416	1,952	A	A	A	A	A	A	A	A	A	A
	2.35	2.11	1,532	1,566	2,121	A	A	A	A	A	A	A	A	A	A
	2.60	2.32	1,666	1,700	2,260	A	A	A	A	A	A	A	B	A	A
	2.72	2.43	1,732	1,766	2,283	A	A	B	A	A	A	A	B	A	A
	2.91	2.59	1,832	1,866	2,411	A	B	B	A	A	A	B	C	A	A
	3.28	2.90	2,032	2,066	2,572	B	C	C	A	A	B	C	D	A	A
	3.60	3.18	2,062	2,096	2,710	C	C	D	A	A	C	D	D	A	B
	3.80	3.35	2,162	2,196	2,826	C	D	D	A	B	C	D	D	A	B
R2H+	3.28	2.90	2,032	2,066	2,684	B	C	C	A	A	C	C	D	A	A
R2S	1.94	1.76	1,350	-	2,268	A	A	A	A	A	A	A	A	A	A
	2.22	2.00	1,500	-	2,408	A	A	A	A	A	A	A	A	A	A
	2.59	2.32	1,700	-	2,594	A	A	B	A	A	A	B	B	A	A
	2.78	2.48	1,800	-	2,736	A	B	B	A	A	B	B	C	A	A
	3.15	2.79	2,000	-	2,922	B	C	C	A	A	C	C	D	A	A
R2X	1.94	1.76	1,370	-	2,485	A	A	A	A	A	A	A	A	A	A
	2.22	2.00	1,520	-	2,649	A	A	A	A	A	A	A	A	A	A
	2.59	2.32	1,720	-	2,930	A	A	B	A	A	A	B	C	A	A
	2.78	2.48	1,820	-	3,040	A	B	C	A	A	B	B	C	A	A
ROCK	1.71	1.48	1,572	-	2,075	A	A	A	A	A	A	A	A	A	A

Track	Fixed Track				C/W (kg)	8,500				
Track Gauge	2,750 (mm)				Shoe (mm)	600				
Bucket Type	Capacity (m^3)		Bucket Width (mm)		Weight (kg)	7.1m Boom			6.3m BOOM	
	SAE/PCSA	CECE	W/O Cutter	With Cutter		2.9m ARM	3.35m ARM	3.98m ARM	2.4 m ARM	2.9 m ARM
GP	2.14	1.89	1,588	1,682	1,910	A	A	A	A	A
	2.39	2.10	1,744	1,837	2,027	A	A	B	A	A
	2.86	2.51	2,037	2,130	2,279	B	C	C	A	A
R2H	2.07	1.87	1,382	1,416	1,952	A	A	A	A	A
	2.35	2.11	1,532	1,566	2,121	A	A	B	A	A
	2.60	2.32	1,666	1,700	2,260	A	B	C	A	A
	2.72	2.43	1,732	1,766	2,283	B	B	C	A	A
	2.91	2.59	1,832	1,866	2,411	B	C	D	A	A
	3.28	2.90	2,032	2,066	2,572	C	D	D	A	B
	3.60	3.18	2,062	2,096	2,710	D	D	-	B	B
	3.80	3.35	2,162	2,196	2,826	D	-	-	B	C
R2H+	3.28	2.90	2,032	2,066	2,684	C	D	D	A	B
R2S	1.94	1.76	1,350	-	2,268	A	A	A	A	A
	2.22	2.00	1,500	-	2,408	A	A	B	A	A
	2.59	2.32	1,700	-	2,594	B	C	C	A	A
	2.78	2.48	1,800	-	2,736	B	C	D	A	A
	3.15	2.79	2,000	-	2,922	C	D	D	A	B
R2X	1.94	1.76	1,370	-	2,485	B	C	C	A	A
	2.22	2.00	1,520	-	2,649	C	D	D	A	A
	2.59	2.32	1,720	-	2,930	D	-	-	B	B
	2.78	2.48	1,820	-	3,040	-	-	-	B	C
ROCK	1.71	1.48	1,572	-	2,075	A	A	A	A	A

Track	Fixed Track				C/W (kg)	9,200				
Track Gauge	2,750 (mm)				Shoe (mm)	600				
Bucket Type	Capacity (m^3)		Bucket Width (mm)		Weight (kg)	7.1m Boom			6.3m BOOM	
	SAE/PCSA	CECE	W/O Cutter	With Cutter		2.9m ARM	3.35m ARM	3.98m ARM	2.4 m ARM	2.9 m ARM
GP	2.14	1.89	1,588	1,682	1,910	A	A	A	A	A
	2.39	2.10	1,744	1,837	2,027	A	A	B	A	A
	2.86	2.51	2,037	2,130	2,279	B	B	C	A	A
R2H	2.07	1.87	1,382	1,416	1,952	A	A	A	A	A
	2.35	2.11	1,532	1,566	2,121	A	A	B	A	A
	2.60	2.32	1,666	1,700	2,260	A	B	B	A	A
	2.72	2.43	1,732	1,766	2,283	A	B	C	A	A
	2.91	2.59	1,832	1,866	2,411	B	C	C	A	A
	3.28	2.90	2,032	2,066	2,572	C	C	D	A	A
	3.60	3.18	2,062	2,096	2,710	D	D	D	A	B
	3.80	3.35	2,162	2,196	2,826	D	D	-	B	B
R2H+	3.28	2.90	2,032	2,066	2,684	C	D	D	A	A
R2S	1.94	1.76	1,350	-	2,268	A	A	A	A	A
	2.22	2.00	1,500	-	2,408	A	A	B	A	A
	2.59	2.32	1,700	-	2,594	A	B	C	A	A
	2.78	2.48	1,800	-	2,736	B	C	C	A	A
	3.15	2.79	2,000	-	2,922	C	D	D	A	A
R2X	1.94	1.76	1,370	-	2,485	A	B	C	A	A
	2.22	2.00	1,520	-	2,649	C	C	D	A	A
	2.59	2.32	1,720	-	2,930	D	D	-	A	B
	2.78	2.48	1,820	-	3,040	D	-	-	B	C
ROCK	1.71	1.48	1,572	-	2,075	A	A	A	A	A

Based on ISO 10567 and SAE J296, arm length without quick change clamp
A : Suitable for materials with density of 2,100kg/m^3 (3,500 lb/yd^3) or less
B : Suitable for materials with density of 1,800kg/m^3 (3,000 lb/yd^3) or less
C : Suitable for materials with density of 1,500 kg/m^3 (2,500 lb/yd^3) or less
D : Suitable for materials with density of 1,200 kg/m^3 (2,000 lb/yd^3) or less
X : Not recommended

STANDARD & OPTION (DX490LC(A)-7M)

STANDARD EQUIPMENT

Boom & Arm

- 7.1 m Boom
- 3.35 m Arm (Heavy duty)

Hydraulic system

- Boom and arm flow regeneration
- Boom and arm holding valves(MCV)
- Swing anti-rebound valves
- Spare ports (Control valve)
- One-touch power boost

Cabin & Interior

- All weather sound suppressed type cab
- Air conditioner & Heater
- Adjustable suspension seat with head rest and adjustable arm rest
- Pull-up type front window and removable lower front window
- Room light
- Intermittent windshield wiper
- Cup holder
- Hot & Cool box
- 8" LCD color monitor panel
- E/G RPM control dial
- AM/FM radio + MP3 (USB)
- Remote radio ON/OFF switch
- 24V power socket
- Serial communication port for laptop PC interface
- Joystick lever with 3 buttons

Safety

- Large handrails and step
- Convex metal anti-slip plates
- Seat belt
- Hydraulic safety lock lever
- Safety glass
- Hammer for emergency escape
- Right and left mirrors
- Handrail

Others

- Double element air cleaner
- Additional water separator
- Dry type pre cleaner
- Fuel filter
- Dust screen for radiator/oil cooler
- Engine overheat prevention system
- Engine restart prevention system
- Self-diagnostic system
- Electric horn
- Halogen working lights (frame mounted 1, boom mounted 2)
- Hydraulic track adjuster
- Track guards
- Greased and sealed track link
- Hydraulic oil tank air breather filter
- 3.9m Retracted Track
- Counterweight (8.5 Ton)
- Single Catwalk
- 600 TG Shoe
- 3.9 m Retracted Track

OPTIONAL EQUIPMENT

Some of optional equipments may be standard in some markets. Some of this optional equipment is not available in some markets. You must check with the local DOOSAN dealer to know about the availability or to release the adaptation following the needs of the applications

Boom & Arm

- 2.4 m Arm (HD)
- 2.9 m Arm (HD)
- 3.35 m Arm
- 3.98 m Arm
- 6.0 m Arm
- 8.0 m Arm
- 3.35 m Arm (HD)
- Non Arm
- 6.3 m Boom
- 7.1 m Boom
- 9.0 m Boom
- 11.0 m Boom
- 7.1 m Boom (HD)
- Non Boom

Safety

- Boom and arm hose rupture protection valve
- Overload warning device
- ROPS Cabin
- FOGS (ISO 10262, FOGS standard)
- Alarm (Travel, Swing, QC)
- Rotating beacon
- LED lights
- Side&Rear view camera
- Around View Monitor (Only for elec. engine)
- Boom & Arm Lock valve
- Seat belt warning
- Side protector
- Cabin front guard (Upper and lower guard)

Cabin & Interior

- Air suspension seat
- Rain Shield
- High seat Mount
- Breaker pedal
- Steel roof cover
- Additional mirror
- DAB Audio
- Rear sun visor
- Artificial leather seat cover
- Heating & cooling seat

Others

- Piping option
  - Piping for Crusher
  - Piping for Breaker
  - Piping for Quick clamp
- Shoe (mm)
  600 DG / 750 TG / 800 TG / 900 TG
- Lower wiper
- Fuel filler pump
- Working Lights
  - 4-front / 2-rear on cabin
  - 2-front on cabin
- Hydraulic Oil
  - Cold weather (VG32)
  - Normal (VG46)
  - Tropical weather (VG68)
- Breaker filter
- Water separator with heater
- Heavy duty under cover
- Long & Fixed track
- Side Protector
- Straight Travel
- Electric Transfer Pump
- Counterweight (9.2 Ton)
- Auto greasing unit
- Air compressor
- Full track guard
- Microphone
- Oil washed pre-cleaner
- Additional 12 V socket

TECHNICAL SPECIFICATION (DX530LCA-7M)

ENGINE

Model

Doosan DX12
4-cyclewater-cooled waste gate turbocharge mechanical direct injection. The emission levels are well below the values required for phase II.

Number of cylinders

6

Nominal flywheel power

GROSS POWER
257 kW (350PS, 344.5HP) @ 1,800 rpm (SAE J1995)
NET POWER
253 kW (343PS, 339.1HP) @ 1,800 rpm (SAE J1349)

Max torque

158.1 kgf.m @ 1,200 rpm

Piston displacement

11,051 cc (674 cu.in)

Bore & stroke

123 mm x 155 mm (4.8" x 6.1")

Starter

24 V / 7.0 kW

Batteries

2 X 12 V / 200 Ah

Air cleaner

Double element with auto dust evacuation.

HYDRAULIC CYLINDERS

The piston rods and cylinder bodies are made of high-strength steel. A shock absorbing mechanism is fitted in all cylinders to ensure shockfree operation and extend piston life.

Cylinders	Quantity	Bore x Rod diameter x stroke
Boom	2	170 x 115 x 1,650 mm
Arm	1	190 x 130 x 1,980 mm
Bucket	1	170 x 115 x 1,341 mm

ENVIRONMENT

Noise levels comply with environmental regulations (dynamic values).

Sound level guarantee

108 DB (A) (2000/14/EC)

Cab sound level

74 DB (A) (ISO 6396)

HYDRAULIC SYSTEM

The heart of the system is the EPOS™ (Electronic Power Optimizing System). It allows the efficiency of the system to be optimized for all working conditions and minimizes fuel consumption.

- The hydraulic system enables independent or combined operations.
- Two travel speeds offer either increased torque or high speed tracking.
- Cross-sensing pump system for fuel savings.
- Auto deceleration system.
- Two operating modes, two power modes.
- Button control of flow in auxiliary equipment circuits.
- Computer-aided pump power control.

Main pumps

2 variable displacement axial piston pumps
Max flow: 2 x 390 l/min

Pilot pump

Gear pump - max flow: 24 l/min

Maximum system pressure

Front
Normal mode : 324 kgf/cm²
Power mode : 343 kgf/cm²
Travel : 324 kgf/cm²
Swing : 300 kgf/cm²

SWING MECHANISM

- An axial piston motor with two-stage planetary reduction gear is used for the swing.
- Increased swing torque reduces swing time.
- Internal induction-hardened gear.
- Internal gear and pinion immersed in lubricant bath.
- The swing brake for parking is activated by spring and released hydraulically.

Swing speed : 0 to 9.0 rpm

UNDERCARRIAGE

Chassis are of very robust construction, all welded structures are designed to limit stresses. High-quality material used for durability. Lateral chassis welded and rigidly attached to the undercarriage. Track rollers lubricated for life, idlers and sprockets fitted with floating seals.

Number of rollers and track shoes per side

Upper rollers : 2 (SINGLE) & 1 (SHAFT), Variable Track
2 (SHAFT), Fixed Track
Lower rollers: 9
Shoes : 53
Total length of track : 5,480 mm (17' 9")

DRIVE

Each track is driven by an independent axial piston motor through a planetary reduction gearbox. Two levers with control pedals guarantee smooth travel with counter rotation on demand.

Travel speed (fast/slow)

5.5 / 3.1 km/h

Maximum traction force

37.0 / 21.0 ton.f (363 / 206 kN)

Maximum grade

70 (35%)

BUCKET DIGGING FORCE

Model: DX490LC(A)-7M, DX530LC(A)-7M

Model	Bucket Type	Capacity (m³)		Bucket Width (mm)		DIGGING FORCE (NOM/PRESS UP, TON)
		CECE	SAE	W/Cutter	W/O Cutter	
DX490LC(A)-7M, DX530LC(A)-7M	GP	1.89	2.14	1,682	1,588	[SAE] 25.8 / 27.4 [ISO] 29.0 / 30.8
		2.1	2.39	1,837	1,744	
		2.5	2.86	2,130	2,037	
	GP (Rock)	1.48	1.71	-	1,572	[SAE] 25.7 / 27.3 [ISO] 30.7 / 32.6
	R2H	1.87	2.07	1,416	1,382	[SAE] 25.3 / 26.8 [ISO] 28.2 / 29.9
		2.11	2.35	1,566	1,532	
		2.32	2.60	1,666	1,700	
		2.43	2.72	1,766	1,732	
		2.59	2.91	1,866	1,832	
		2.90	3.28	2,066	2,032	
		3.18	3.60	2,096	2,062	
		3.35	3.80	2,196	2,162	
	R2H+	2.90	3.28	2,066	2,032	
	R2S	1.76	1.94	-	1,350	
		2.00	2.22	-	1,500	
		2.32	2.59	-	1,700	
		2.48	2.78	-	1,800	
		2.79	3.15	-	2,000	
	R2X	1.76	1.94	-	1,370	
		2.00	2.22	-	1,520	
		2.32	2.59	-	1,720	
		2.48	2.78	-	1,820	
DX530LC(A)-7M ONLY	SLR	0.81	0.93	1,236	1,173	[SAE] 13.7 / 14.5 [ISO] 16.0 / 17.0
	SEMI SLR	1.1	1.27	1,445	1,376	[SAE] 18.1 / 19.1 [ISO] 20.4 / 21.7
	SEMI SLR (DC)	0.96	1.12	-	1,500	[SAE] 19.3 / 20.4 [ISO] 22.2 / 23.5
		1.17	1.37	-	1,800	

ARM DIGGING FORCE

BOOM (mm)	ARM	LENGTH (mm)	WEIGHT (kg)	DIGGING FORCE (NOM/PRESS UP, TON)
Standard Heavy Duty Short	STD	3,350	1,684	[SAE] 21.0 / 22.2, [ISO] 21.3 / 22.6
	HEAVY DUTY	3,350	1,775	[SAE] 21.0 / 22.2, [ISO] 21.3 / 22.6
	SHORT	2,900	1,655	[SAE] 23.8 / 25.3, [ISO] 24.3 / 25.7
	LONG	3,980	1,831	[SAE] 18.9 / 20.0, [ISO] 19.0 / 20.2
6,300	SHORT	2,400	1,462	[SAE] 27.6 / 29.2, [ISO] 28.2 / 29.9
	SHORT	2,900	1,655	[SAE] 23.8 / 25.3, [ISO] 24.3 / 25.7

REFILL CAPACITIES

Fuel tank

626 L (165.4 US gal)

Cooling system (Radiator capacity)

56.5 L (14.9 US gal)

Engine oil

31 L (8.2 US gal)

Swing drive

2 X 5 L (2 X 1.32 US gal)

Final drive
(each =Travel Device = travel motor + travel reduction gear)

2 X 9 L (2 X 2.38 US gal)

Hydraulic tank

390 L (103 US gal)

WEIGHT

Shoe Width (mm)	Ground Pressure kgf/cm² (psi)	Machine Weight (ton)
STD. 600TG	0.93 (13.2)	53.5
OPT. 750TG	0.76 (10.8)	54.5
OPT. 800TG	0.71 (10.1)	54.8
OPT. 900TG	0.64 (9.1)	55.4
OPT. 600DG	0.93 (13.2)	53.6

*with wide variable track

Shoe Width (mm)	Ground Pressure kgf/cm² (psi)	Machine Weight (ton)
STD. 600TG	0.88 (12.5)	50.9
OPT. 750TG	0.72 (10.2)	51.9
OPT. 800TG	0.68 (9.7)	52.2
OPT. 900TG	0.61 (8.7)	52.7
OPT. 600DG	0.88 (12.5)	50.9

*with fixed track

TECHNICAL SPECIFICATION (DX530LC-7M)

ENGINE

Model

SCANIA DC13
4-cycle, water-cooled Waste gate conrolled turbocharger, Unit injector . The emission levels are well below the values required for phase III.

Number of cylinders

6

Nominal flywheel power

GROSS POWER
294 kW (399.7PS, 394.2HP) @ 1,800 rpm (SAE J1995)
NET POWER
289 kW (392.9PS, 387.6HP) @ 1,800 rpm (SAE J1349)

Max torque

1,930 Nm @ 1,400 rpm

Piston displacement

12,700 cc (775 cu.in)

Bore & stroke

Φ130 X 160 mm (4.0” x 4.6”)

Starter

24 V / 6.0 kW

Batteries

2 X 12 V / 200 Ah

Air cleaner

Double element with auto dust evacuation.

HYDRAULIC CYLINDERS

The piston rods and cylinder bodies are made of high-strength steel. A shock absorbing mechanism is fitted in all cylinders to ensure shockfree operation and extend piston life.

Cylinders	Quantity	Bore x Rod diameter x stroke
Boom	2	170 x 115 x 1,650 mm
Arm	1	190 x 130 x 1,980 mm
Bucket	1	170 x 115 x 1,341 mm

ENVIRONMENT

Noise levels comply with environmental regulations (dynamic values).

Sound level guarantee

107 DB (A) (2000/14/EC)

Cab sound level

74 DB (A) (ISO 6396)

HYDRAULIC SYSTEM

The heart of the system is the EPOS™ (Electronic Power Optimizing System). It allows the efficiency of the system to be optimized for all working conditions and minimizes fuel consumption.

- The hydraulic system enables independent or combined operations.
- Two travel speeds offer either increased torque or high speed tracking.
- Cross-sensing pump system for fuel savings.
- Auto deceleration system.
- Two operating modes, two power modes.
- Button control of flow in auxiliary equipment circuits.
- Computer-aided pump power control.

Main pumps

2 variable displacement axial piston pumps
Max flow: 2 x 390 l/min

Pilot pump

Gear pump - max flow: 24 l/min

Maximum system pressure

Front
Normal mode : 324 kgf/cm^2
Power mode : 343 kgf/cm^2
Travel : 324 kgf/cm^2
Swing : 300 kgf/cm^2

SWING MECHANISM

- An axial piston motor with two-stage planetary reduction gear is used for the swing.
- Increased swing torque reduces swing time.
- Internal induction-hardened gear.
- Internal gear and pinion immersed in lubricant bath.
- The swing brake for parking is activated by spring and released hydraulically.

Swing speed : 0 to 9 rpm

UNDERCARRIAGE

Chassis are of very robust construction, all welded structures are designed to limit stresses. High-quality material used for durability. Lateral chassis welded and rigidly attached to the undercarriage. Track rollers lubricated for life, idlers and sprockets fitted with floating seals.

Number of rollers and track shoes per side

Upper rollers : 2 (SINGLE) & 1 (SHAFT), Variable Track
2 (SHAFT), Fixed Track

Lower rollers: 9
Shoes : 53
Total length of track : 5,480 mm (17’ 9”)

DRIVE

Each track is driven by an independent axial piston motor through a planetary reduction gearbox. Two levers with control pedals guarantee smooth travel with counter rotation on demand.

Travel speed (fast/slow)

5.5 / 3.1 km/h

Maximum traction force

37.0 / 21.0 ton.f (363 / 206 kN)

Maximum grade

70 (35%)

BUCKET DIGGING FORCE

Model: DX490LC(A)-7M, DX530LC(A)-7M

Model	Bucket Type	Capacity (m^3)		Bucket Width (mm)		DIGGING FORCE (NOM/PRESS UP, TON)
		CECE	SAE	W/Cutter	W/O Cutter	
DX490LC(A)-7M, DX530LC(A)-7M	GP	1.89	2.14	1,682	1,588	[SAE] 25.8 / 27.4 [ISO] 29.0 / 30.8
		2.1	2.39	1,837	1,744	
		2.5	2.86	2,130	2,037	
	GP (Rock)	1.48	1.71	-	1,572	[SAE] 25.7 / 27.3 [ISO] 30.7 / 32.6
	R2H	1.87	2.07	1,416	1,382	[SAE] 25.3 / 26.8 [ISO] 28.2 / 29.9
		2.11	2.35	1,566	1,532	
		2.32	2.60	1,666	1,700	
		2.43	2.72	1,766	1,732	
		2.59	2.91	1,866	1,832	
		2.90	3.28	2,066	2,032	
		3.18	3.60	2,096	2,062	
		3.35	3.80	2,196	2,162	
	R2H+	2.90	3.28	2,066	2,032	
	R2S	1.76	1.94	-	1,350	
		2.00	2.22	-	1,500	
		2.32	2.59	-	1,700	
		2.48	2.78	-	1,800	
		2.79	3.15	-	2,000	
	R2X	1.76	1.94	-	1,370	
		2.00	2.22	-	1,520	
		2.32	2.59	-	1,720	
		2.48	2.78	-	1,820	
DX530LC(A)-7M ONLY	SLR	0.81	0.93	1,236	1,173	[SAE] 13.7 / 14.5 [ISO] 16.0 / 17.0
	SEMI SLR	1.1	1.27	1,445	1,376	[SAE] 18.1 / 19.1 [ISO] 20.4 / 21.7
	SEMI SLR (DC)	0.96	1.12	-	1,500	[SAE] 19.3 / 20.4 [ISO] 22.2 / 23.5
		1.17	1.37	-	1,800	

ARM DIGGING FORCE

BOOM (mm)	ARM	LENGTH (mm)	WEIGHT (kg)	DIGGING FORCE (NOM/PRESS UP, TON)
Standard Heavy Duty Short	STD	3,350	1,684	[SAE] 21.0 / 22.2, [ISO] 21.3 / 22.6
	HEAVY DUTY	3,350	1,775	[SAE] 21.0 / 22.2, [ISO] 21.3 / 22.6
	SHORT	2,900	1,655	[SAE] 23.8 / 25.3, [ISO] 24.3 / 25.7
	LONG	3,980	1,831	[SAE] 18.9 / 20.0, [ISO] 19.0 / 20.2
6,300	SHORT	2,400	1,462	[SAE] 27.6 / 29.2, [ISO] 28.2 / 29.9
	SHORT	2,900	1,655	[SAE] 23.8 / 25.3, [ISO] 24.3 / 25.7

REFILL CAPACITIES

Fuel tank

626 L (165.4 US gal)

Cooling system (Radiator capacity)

53.3 L (14.1 US gal)

Engine oil

45 L (11.9 US gal)

Swing drive

2 X 5 L (2 X 1.32 US gal)

Final drive
(each =Travel Device = travel motor + travel reduction gear)

2 X 9 L (2 X 2.38 US gal)

Hydraulic tank

390 L (103 US gal)

WEIGHT

Shoe Width (mm)	Ground Pressure kgf/cm^2 (psi)	Machine Weight (ton)
STD. 600TG	0.93 (13.2)	53.5
OPT. 750TG	0.76 (10.8)	54.5
OPT. 800TG	0.71 (10.1)	54.8
OPT. 900TG	0.64 (9.1)	55.4
OPT. 600DG	0.93 (13.2)	53.6

*with wide variable track

Shoe Width (mm)	Ground Pressure kgf/cm^2 (psi)	Machine Weight (ton)
STD. 600TG	0.88 (12.5)	50.9
OPT. 750TG	0.72 (10.2)	51.9
OPT. 800TG	0.68 (9.7)	52.2
OPT. 900TG	0.61 (8.7)	52.7
OPT. 600DG	0.88 (12.5)	50.9

*with fixed track

TECHNICAL SPECIFICATION (DX530LC(A)-7M)

BUCKET & ARM COMBINATIONS

Track	Wide Variable Track (3.9 m)				C/W (kg)	11,100						
Track Gauge	2,740 / 3,300 (mm) [Retrackted/Extended]				Shoe (mm)	600						
Bucket Type	Capacity (m^3)		Bucket Width (mm)		Weight (kg)	7.1m Boom			6.3m Boom		9m Boom	11m Boom
	SAE/PCSA	CECE	W/O Cutter	With Cutter		2.9m Arm	3.35m Arm	3.98m Arm	2.4m Arm	2.9m Arm	6m Arm	8m Arm
SLR	0.92	0.81	1,173	1,236	724	-	-	-	-	-	-	A
SEMI	1.27	1.10	1,376	1,445	1,094	-	-	-	-	-	A	-
SEMI_DC	1.12	0.96	1,500	-	975	-	-	-	-	-	A	-
	1.37	1.17	1,800	-	1,116	-	-	-	-	-	A	-
GP	2.14	1.89	1,588	1,682	1,910	A	A	A	A	A	-	-
	2.39	2.10	1,744	1,837	2,027	A	A	A	A	A	-	-
	2.86	2.51	2,037	2,130	2,279	A	A	A	A	A	-	-
R2H	2.07	1.87	1,382	1,416	1,831	A	A	A	A	A	-	-
	2.35	2.11	1,532	1,566	1,952	A	A	A	A	A	-	-
	2.60	2.32	1,666	1,700	2,260	A	A	A	A	A	-	-
	2.72	2.43	1,732	1,766	2,121	A	A	A	A	A	-	-
	2.91	2.59	1,832	1,866	2,283	A	A	B	A	A	-	-
	3.28	2.90	2,032	2,066	2,411	A	B	C	A	A	-	-
	3.60	3.18	2,062	2,096	2,710	B	C	C	A	A	-	-
	3.80	3.35	2,162	2,196	2,826	C	C	D	A	A	-	-
R2H+	3.28	2.90	2,032	2,066	2,572	B	B	C	A	A	-	-
R2S	1.94	1.76	1,350	-	2,268	A	A	A	A	A	-	-
	2.22	2.00	1,500	-	2,408	A	A	A	A	A	-	-
	2.59	2.32	1,700	-	2,594	A	A	A	A	A	-	-
	2.78	2.48	1,800	-	2,736	A	A	B	A	A	-	-
	3.15	2.79	2,000	-	2,922	B	B	C	A	A	-	-
R2X	1.94	1.76	1,370	-	2,485	A	A	A	A	A	-	-
	2.22	2.00	1,520	-	2,649	A	A	A	A	A	-	-
	2.59	2.32	1,720	-	2,930	A	A	B	A	A	-	-
	2.78	2.48	1,820	-	3,040	A	A	B	A	A	-	-
ROCK	1.71	1.48	1,572	-	2,075	A	A	A	A	A	-	-

Track	Wide Variable Track (3.9 m)				C/W (kg)	11,100						
Track Gauge	2,740 / 3,300 (mm) [Retrackted/Extended]				Shoe (mm)	900						
Bucket Type	Capacity (m^3)		Bucket Width (mm)		Weight (kg)	7.1m Boom			6.3m Boom		9m Boom	11m Boom
	SAE/PCSA	CECE	W/O Cutter	With Cutter		2.9m Arm	3.35m Arm	3.98m Arm	2.4m Arm	2.9m Arm	6m Arm	8m Arm
SLR	0.92	0.81	1,173	1,236	724	-	-	-	-	-	-	A
SEMI	1.27	1.10	1,376	1,445	1,094	-	-	-	-	-	A	-
SEMI_DC	1.12	0.96	1,500	-	975	-	-	-	-	-	A	-
	1.37	1.17	1,800	-	1,116	-	-	-	-	-	A	-
GP	2.14	1.89	1,588	1,682	1,910	A	A	A	A	A	-	-
	2.39	2.10	1,744	1,837	2,027	A	A	A	A	A	-	-
	2.86	2.51	2,037	2,130	2,279	A	A	A	A	A	-	-
R2H	2.07	1.87	1,382	1,416	1,831	A	A	A	A	A	-	-
	2.35	2.11	1,532	1,566	1,952	A	A	A	A	A	-	-
	2.60	2.32	1,666	1,700	2,260	A	A	A	A	A	-	-
	2.72	2.43	1,732	1,766	2,121	A	A	A	A	A	-	-
	2.91	2.59	1,832	1,866	2,283	A	A	A	A	A	-	-
	3.28	2.90	2,032	2,066	2,411	A	B	B	A	A	-	-
	3.60	3.18	2,062	2,096	2,710	B	B	C	A	A	-	-
	3.80	3.35	2,162	2,196	2,826	B	C	C	A	A	-	-
R2H+	3.28	2.90	2,032	2,066	2,572	A	B	B	A	A	-	-
R2S	1.94	1.76	1,350	-	2,268	A	A	A	A	A	-	-
	2.22	2.00	1,500	-	2,408	A	A	A	A	A	-	-
	2.59	2.32	1,700	-	2,594	A	A	A	A	A	-	-
	2.78	2.48	1,800	-	2,736	A	A	A	A	A	-	-
	3.15	2.79	2,000	-	2,922	A	B	C	A	A	-	-
R2X	1.94	1.76	1,370	-	2,485	A	A	A	A	A	-	-
	2.22	2.00	1,520	-	2,649	A	A	A	A	A	-	-
	2.59	2.32	1,720	-	2,930	A	A	B	A	A	-	-
	2.78	2.48	1,820	-	3,040	A	A	A	A	A	-	-
ROCK	1.71	1.48	1,572	-	2,075	A	A	A	A	A	-	-

Track	Fixed Track				C/W (kg)	11,100				
Track Gauge	2,750				Shoe (mm)	600				
Bucket Type	Capacity (m^3)		Bucket Width (mm)		Weight (kg)	7.1m Boom			6.3m Boom	
	SAE/PCSA	CECE	W/O Cutter	With Cutter		2.9m Arm	3.35m Arm	3.98m Arm	2.4m Arm	2.9m Arm
SLR	0.92	0.81	1,173	1,236	724	-	-	-	-	-
SEMI	1.27	1.10	1,376	1,445	1,094	-	-	-	-	-
SEMI_DC	1.12	0.96	1,500	-	975	-	-	-	-	-
	1.37	1.17	1,800	-	1,116	-	-	-	-	-
GP	2.14	1.89	1,588	1,682	1,910	A	A	A	A	A
	2.39	2.10	1,744	1,837	2,027	A	A	A	A	A
	2.86	2.51	2,037	2,130	2,279	A	A	B	A	A
R2H	2.07	1.87	1,382	1,416	1,831	A	A	A	A	A
	2.35	2.11	1,532	1,566	1,952	A	A	A	A	A
	2.60	2.32	1,666	1,700	2,260	A	A	A	A	A
	2.72	2.43	1,732	1,766	2,121	A	A	B	A	A
	2.91	2.59	1,832	1,866	2,283	A	B	B	A	A
	3.28	2.90	2,032	2,066	2,411	B	B	C	A	A
	3.60	3.18	2,062	2,096	2,710	C	C	D	A	A
	3.80	3.35	2,162	2,196	2,826	C	D	D	A	A
R2H+	3.28	2.90	2,032	2,066	2,572	B	C	C	A	A
R2S	1.94	1.76	1,350	-	2,268	A	A	A	A	A
	2.22	2.00	1,500	-	2,408	A	A	A	A	A
	2.59	2.32	1,700	-	2,594	A	A	B	A	A
	2.78	2.48	1,800	-	2,736	A	B	B	A	A
	3.15	2.79	2,000	-	2,922	B	C	C	A	A
R2X	1.94	1.76	1,370	-	2,485	A	B	C	A	A
	2.22	2.00	1,520	-	2,649	C	C	D	A	A
	2.59	2.32	1,720	-	2,930	C	D	D	A	A
	2.78	2.48	1,820	-	3,040	A	A	A	A	A
ROCK	1.71	1.48	1,572	-	2,075	A	A	A	A	A

Based on ISO 10567 and SAE J296, arm length without quick change clamp
A : Suitable for materials with density of 2,100kg/m^3 (3,500 lb/yd^3) or less
B : Suitable for materials with density of 1,800kg/m^3 (3,000 lb/yd^3) or less
C : Suitable for materials with density of 1,500 kg/m^3 (2,500 lb/yd^3) or less
D : Suitable for materials with density of 1,200 kg/m^3 (2,000 lb/yd^3) or less
X : Not recommended

STANDARD & OPTION (DX530LC(A)-7M)

STANDARD EQUIPMENT

Boom & Arm

- 6.3 m Boom
- 2.9 m Arm (Heavy duty)

Hydraulic system

- Boom and arm flow regeneration
- Boom and arm holding valves(MCV)
- Swing anti-rebound valves
- Spare ports (Control valve)
- One-touch power boost

Cabin & Interior

- All weather sound suppressed type cab
- Air conditioner & Heater
- Adjustable suspension seat with head rest and adjustable arm rest
- Pull-up type front window and removable lower front window
- Room light
- Intermittent windshield wiper
- Cup holder
- Hot & Cool box
- 8" LCD color monitor panel
- E/G RPM control dial
- AM/FM radio + MP3 (USB)
- Remote radio ON/OFF switch
- 24V power socket
- Serial communication port for laptop PC interface
- Joystick lever with 3 buttons

Safety

- Large handrails and step
- Convex metal anti-slip plates
- Seat belt
- Hydraulic safety lock lever
- Safety glass
- Hammer for emergency escape
- Right and left mirrors
- Handrail

Others

- Double element air cleaner
- Additional water separator
- Dry type pre cleaner
- Fuel filter
- Dust screen for radiator/oil cooler
- Engine overheat prevention system
- Engine restart prevention system
- Self-diagnostic system
- Electric horn
- Halogen working lights (frame mounted 1, boom mounted 2)
- Hydraulic track adjuster
- Track guards
- Greased and sealed track link
- Hydraulic oil tank air breather filter
- 3.9m Retracted Track
- Counterweight (11.1 Ton)
- Single Catwalk
- 600 TG Shoe
- 3.9 m Retracted Track

OPTIONAL EQUIPMENT

Some of optional equipments may be standard in some markets. Some of this optional equipment is not available in some markets. You must check with the local DOOSAN dealer to know about the availability or to release the adaptation following the needs of the applications

Boom & Arm

- 2.4 m Arm (HD)
- 2.9 m Arm (HD)
- 3.35 m Arm
- 3.98 m Arm
- 6.0 m Arm
- 8.0 m Arm
- 3.35 m Arm (HD)
- Non Arm
- 6.3 m Boom
- 7.1 m Boom
- 9.0 m Boom
- 11.0 m Boom
- 7.1 m Boom (HD)
- Non Boom

Safety

- Boom and arm hose rupture protection valve
- Overload warning device
- ROPS Cabin
- FOGS (ISO 10262, FOGS standard)
- Alarm (Travel, Swing, QC)
- Rotating beacon
- LED lights
- Side&Rear view camera
- Around View Monitor (Only for elec engine)
- Boom & Arm lock valve
- Seat belt warning
- Side protector & catwalk
- Cabin front guard (Upper and lower guard)

Cabin & Interior

- Air suspension seat
- Rain Shield
- High seat Mount
- Breaker pedal
- Steel roof cover
- Additional mirror
- DAB Audio
- Rear sun visor
- Artificial leather seat cover
- Heating & cooling seat

Others

- Piping option
  - Piping for Crusher
  - Piping for Breaker
  - Piping for Quick clamp
- Shoe (mm)
  600 DG / 750 TG / 800 TG / 900 TG
- Lower wiper
- Fuel filler pump
- Working Lights
  - 4-front / 2-rear on cabin
  - 2-front on cabin
- Hydraulic Oil
  - Cold weather (VG32)
  - Normal (VG46)
  - Tropical weather (VG68)
- Breaker filter
- Water separator with heater
- Heavy duty under cover
- Long & Fixed track
- Side Protector
- Straight Travel
- Electric Transfer Pump
- Auto greasing unit
- Air compressor
- Full track guard
- Microphone
- Oil washed pre-cleaner
- Additional 12 V socket