TECHNICAL DATA

PNEUMATIC TYRED ROLLERS

BW 11 RH-5

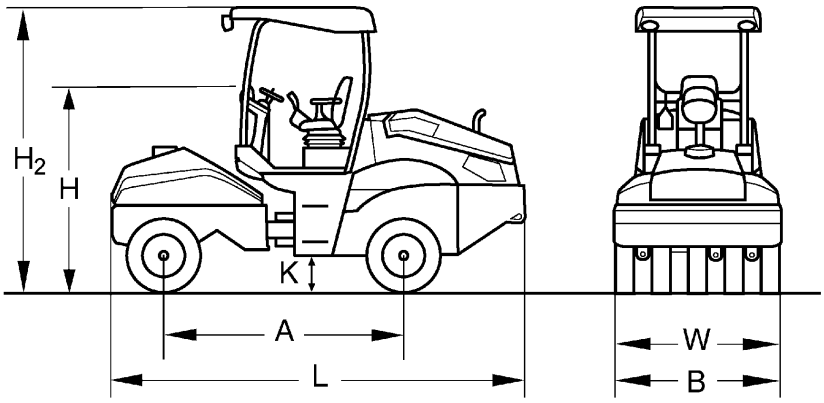

Dimensions in mm

	A	B	H	H2	K	L	W
BW 11 RH-5	2500	1727	2085	2870	380	4430	1727

Shipping dimensions in m3	without ROPS	with ROPS
BW 11 RH-5	15,952	21,957

Machine type	Compaction output (t/h) at different asphalt layer thicknesses		
	2-4 cm	6-8 cm	10-12 cm
BW 11 RH-5	90-180	270-360	450-540

Technical Data		BOMAG BW 11 RH-5
Weights		
Operating weight w. ROPS CECE	kg	5.200
Operating weight CECE w. ROPS-cabin	kg	5.400
Grossweight	kg	11.000
Max. middle wheel load CECE	kg	1.222
Dimensions		
Track radius, inner	mm	3.100
Driving Characteristics		
Speed (1)	km/h	12,0
Speed (2)	km/h	16,0
Speed (3)	km/h	20,0
Max. gradeability (dep. on soil con.)	%	20
Drive		
Engine manufacturer		Kubota
Type		V 3307 DI-T
Emission stage		3
Cooling		water
Number of cylinders		4
Performance ISO 14396	kW	55,4
Performance SAE J 1995	hp	74,0
Electric equipment	V	12
Drive system		hydrost.
Driven axles		rear
Tyres		
Tyre size		7,50x15 14PL
Wheel track overlap	mm	12,5
Number of tyres, front / rear		5/4
Steering		
Steering system		oscil.artic.
Steering method		hydrost.
Steering angle +/-	grad	35
Oscillating angle +/-	grad	10
Oscillation of tyres, front	grad	5
Capacities		
Fuel	l	200,0
Water	l	530,0

Technical modifications reserved. Machines may be shown with options.

Standard Equipment

- ☑ Hour meter
- ☑ Warning horn
- ☑ Control panel for
  - Engine oil pressure
  - Engine temperature
  - Air filter vacuum
  - Hydraulic oil filter
  - Coolant level
  - fuel tank capacity
- ☑ Lockable anti vandal dashboard protection
- ☑ Operator's platform with:
  - + Steering wheel and travel lever
  - + Driver's seat, slewable
- ☑ Back-up alarm

Optional Equipment

- ☐ * ROPS/FOPS with safety belt
- ☐ * ROPS-cabin with heating
- ☐ * ROPS cabin with air conditioning
- ☐ Special painting
- ☐ Additional weight
  - 7t Grossweight
  - 9t Grossweight
  - 11t Grossweight
- ☐ Radio
- ☐ Backup warning buzzer with broadband technology
- ☐ Indicator and hazard lights
- ☐ Thermal aprons
- ☐ Brake release device
- ☐ Rotary beacon
- ☐ Pressure sprinkler system/Scrapers

* Standard delivery with CE conformity (valid within European Union)

BOMAG
Hellerwald
D-56154 Boppard
P.O. Box 5162
Tel. (0)6742 - 1000
Fax (0)6742 - 3090