BOMAG
FAYAT GROUP

PERFORMANCE DATA

PAVER (TIER 3)

BF 800 P

MAGMA LIFE

Greatest durability

QUICKCOUPLING

Shorter set-up times

ECOMODE

Exemplary efficiency

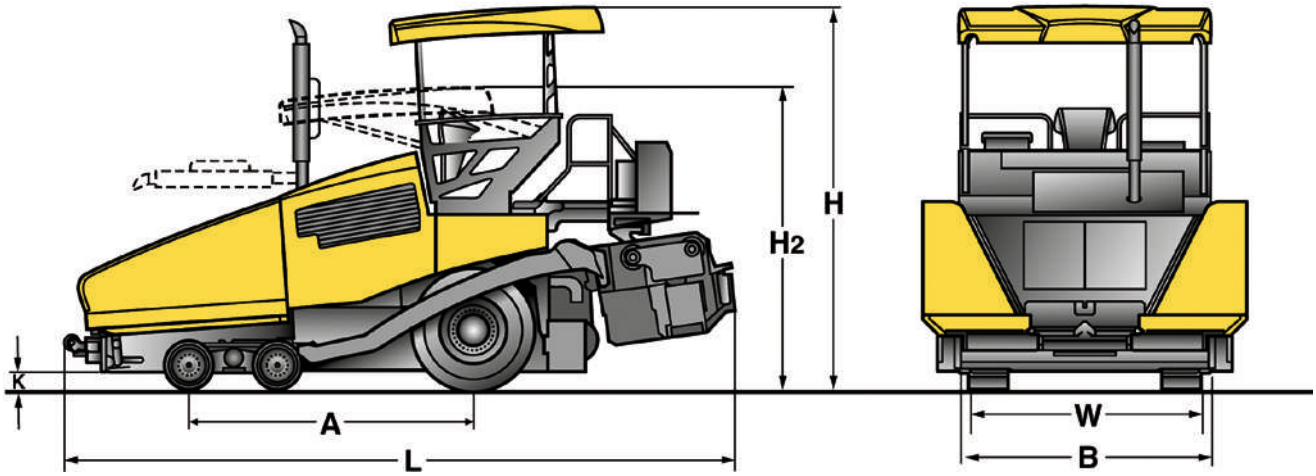

Dimensions in mm

	A	B	H	H_2	L	W
BF 800 P S 500	3125	2550	3865	3055	6800	2550
BF 800 P S 600	3125	3000	3865	3055	6800	3000

Save up to 17 % fuel – demand-driven hydraulics – with BOMAG ECOMODE.

Heats up nearly 60 % quicker – unique MAGMALIFE heating system.

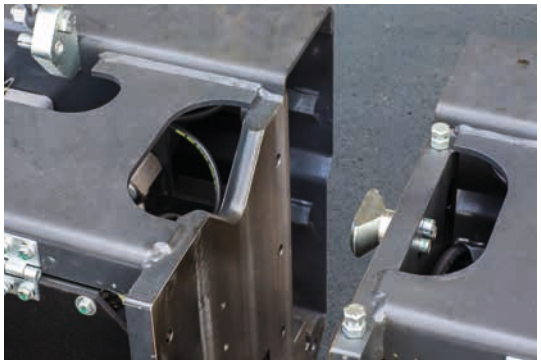

Attaching is up to 48 % quicker – thanks to the BOMAG QUICK COUPLING SYSTEM.

The right position in each situation – the comfortable driver's cabin.

Technical Data		BOMAG BF 800 P S 500	BOMAG BF 800 P S 600
Weights			
Operating weight CECE	kg	20800	21300
Dimensions			
Transport length	mm	6800	6800
Transport width	mm	2550	3000
Transport height	mm	3055	3055
Inner track radius	mm	3900	3900
Outer track radius	mm	6500	6500
Travel characteristics			
Travel speed (1)	km/h	7	7
Travel speed (2)	km/h	0-15	0-15
Working speed (1)	m/min	0-20	0-20
Working speed (2)	m/min	0-45	0-45
Drive			
Engine manufacturer		DEUTZ	DEUTZ
Type		TCD 2012 L06	TCD 2012 L02
Exhaust classicication		Stage III a / TIER 3	Stage III a / TIER 3
Cooling		Water	Water
Number of cylinders		6	6
Rated power ISO 3046	kW	135	135
Rated speed	min^{-1}	2000	2000
Crawler assembly			
Rear tyres			
-Number		2	2
-Type		445/80 R25	445/80 R25
Front tyres			
-Number		4	4
-Diameter	mm	500	500
-Width	mm	280	280
Hoppe			
Capacity	m^3	7,2	7,2
Width (wings open)	mm	3320	3320
Width (wings closed)	mm	2250	2250
Length	mm	2010	2010
Filling height (middle)	mm	500	500
Scraper belt / auger			
Quantity		2	2
Width	mm	400	400
Rated speed	U/min	60	60
Individual control		Standard	Standard
Reversing operation		Standard	Standard
Conveyor auger			
>Number		2	2
->Auger diameter	mm	400	400
->Rotary speed	U/min	95	95
->Reversing operation		Standard	Standard
Screed		S 500	S 600
Screed type		S 500	S 600
Basic width retracted	mm	2550	3000
Basic width extended	mm	5000	6000
Max. working width	mm	9000	9000
min. width with reducing skids	mm	1800	2300
Mat height	mm	300	300
Smoothing plate depth	mm	400	400
Smooting plate thickness	mm	15	15
Heating		Elektric	Elektric
Crown	%	-2,5 ... +4,5	-2,5 ... +4,5
Tamper frequency	Hz	0-29	0-29
Vibration frequency	Hz	20-58	20-58
Basic weight	kg	3900	4200
Filling capacities			
Fuel	l	315	315
Hydraulikc oil	l	160	160
Operating/control elements			
Number of driver‘s seats		1	1
SideView		Standard	Standard
LCS System		Standard	Standard

Technical modifications reserved. Machines may be shown with options. The actual machine weight depends on the respective configuration.

Standard equipment

- ☑ SIDEVIEW
- ☑ Driver‘s seat: with swivel and side- shift
- ☑ Protection; dashboard
- ☑ Hydraulic hinged roof
- ☑ Digital display for machine management
- ☑ Separate control of hopper wings
- ☑ Cleaning kit
- ☑ Hydraulic, height adjustable auger
- ☑ Track scraper
- ☑ L.C.S. Screed relief and traction increase system
- ☑ Screed temperature control
- ☑ Cast heating elements
- ☑ Automatic screed heating
- ☑ Hydraulic screed control
- ☑ Crown adjustment
- ☑ 6 work lights
- ☑ Side control of auger/scraper belts
- ☑ Tools
- ☑ 6 x 6 all wheel drive
- ☑ 30 kVA generator
- ☑ Socket 2 x 240 volt
- ☑ 2 proportionally controlled and reversible wear-resistant cast augers; screw blades separately replaceable
- ☑ 2 independent and reversible scraper belts; high- wear resistant plates

Optional equipment

- ☐ Hydraulic hopper front flap
- ☐ Hydraulic/electric movable platform
- ☐ Hydraulic crown adjustment
- ☐ Hinged side plates
- ☐ Heated side plates
- ☐ Side windscreened platform
- ☐ Seat warmer
- ☐ Asphalt steam extraction
- ☐ Biologically degradable hydraulic oil
- ☐ Central lubrication system
- ☐ L.C.S. half-sided
- ☐ Optional paint finish
- ☐ S 500 + S 600 extensions:
  250 mm
  500 mm
  750 mm
  1250 mm
- ☐ Reduction shoe
- ☐ Edge shaper 45°/60°
- ☐ Light balloon
- ☐ Socket 2 x 240 volt
- ☐ Levelling systems: Height and cross-slope sensing by means of ultrasonic or mechanical sensors

BOMAG
Hellerwald
D-56154 Boppard
Postfach 5162
D-56149 Boppard
Tel. (0)6742 - 1000
Fax (0)6742 - 3090

BOMAG
FAYAT GROUP